REV	ECN	APP'D
-	4679	JT 12/20/01
A	5793	RS 1/27/06
B	5971	

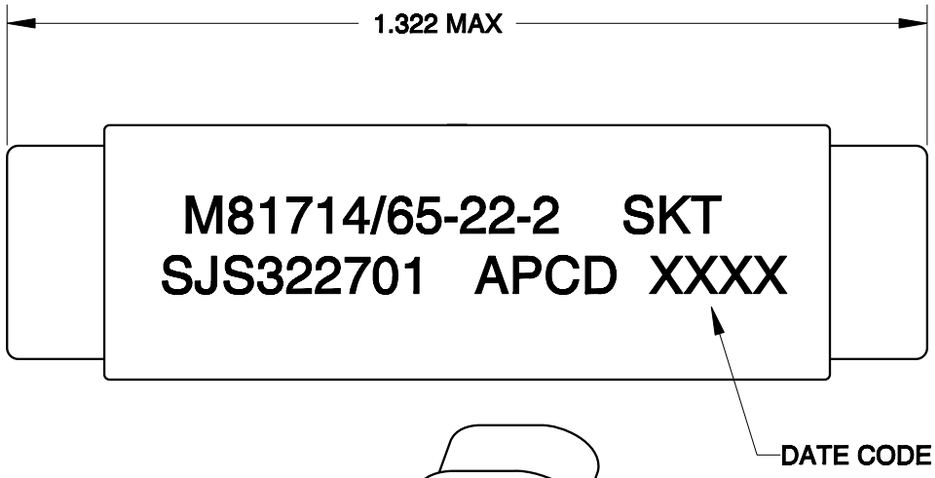

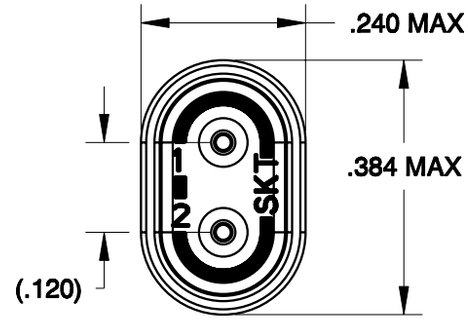

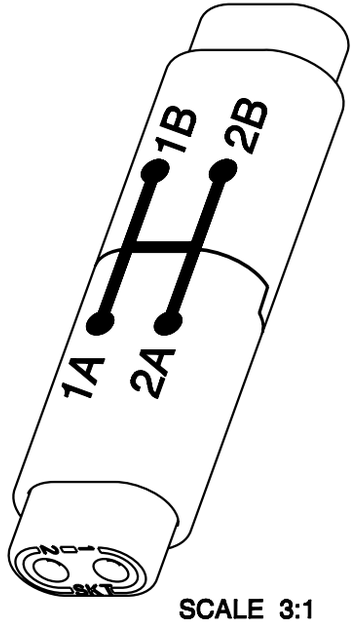

SCALE 3:1

NOTES:
1. MATERIALS:
   INSULATOR BODY: POLYETHERIMIDE PER ASTM-D-5205
   WIRE-SEALING GROMMET: SILICONE RUBBER PER A-A-59588
   INTERNAL CONTACT: COPPER ALLOY, GOLD FINISH
2. PART ACCEPTS M39029/22-191 SOCKET CONTACTS - PER TABLE.
3. OPERATING RANGE:
   TEMPERATURE: -65° C TO 200° C
   INSULATION RESISTANCE: 5000 MEGOHMS MIN
   DIELECTRIC WITHSTANDING VOLTAGE: 1500 VRMS, SEA LEVEL
   200 VRMS, 100,000 FT ALTITUDE
   CURRENT RATING: 5 AMPS
   VIBRATION AND SHOCK: PER MIL-T-81714, PARA. 3.5.5 AND 3.5.8.

PART NO.	DESCRIPTION	P/N MARKING
SJS322601	CONTACTS NOT SUPPLIED	SJS322701
SJS322701	QTY 5, M39029/22-191 INCLUDED QTY 1, MS27488-22-1 SEALING PLUG INCLUDED	

DIMENSIONS	TOLERANCES	PROJECTION
ANSI Y14.5M	.XX ±0.01	
UNITS: INCHES	.XXX ±0.005	
Pro/E FILE	ANGLES ±1.0°	

Amphenol Pcd

SPECIFICATION DRAWING

ENGR S. HORNER 12/17/01

CHKD

APPD

TITLE

SJS
WIRE SPLICE, DOUBLE
BUSSED, SIZE 22

THIS DOCUMENT CONTAINS PROPRIETARY INFORMATION WHICH IS THE CONFIDENTIAL PROPERTY OF AMPHENOL PCD INC., PEABODY, MA

SIZE	*DWG NO.*	*REV*
A	SJS322701_C	B

CODE: 58982 | SCALE: 4:1 | SHEET 1 OF 1