SJS861200

REV	ECN	APP'D
-	6846	JT 8/28/12
A	6964	6/24/13

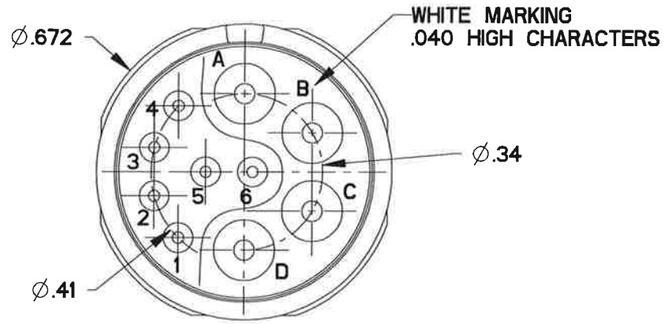

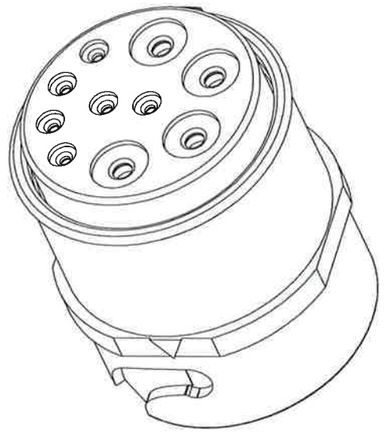

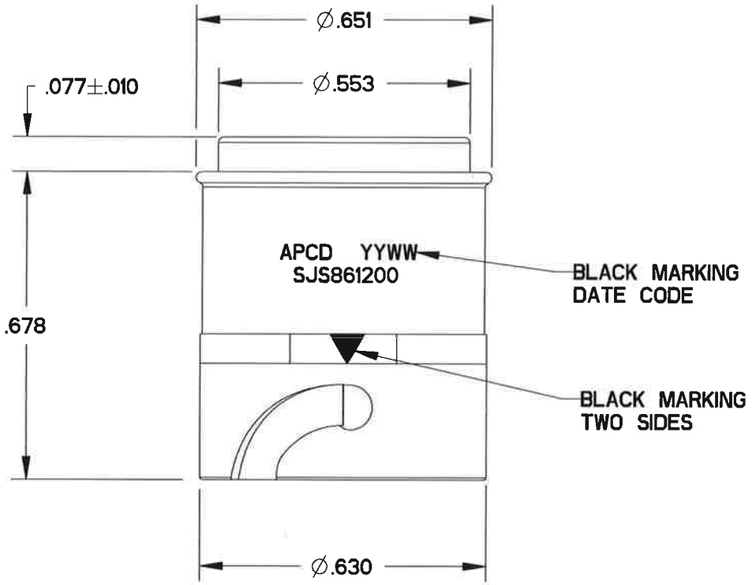

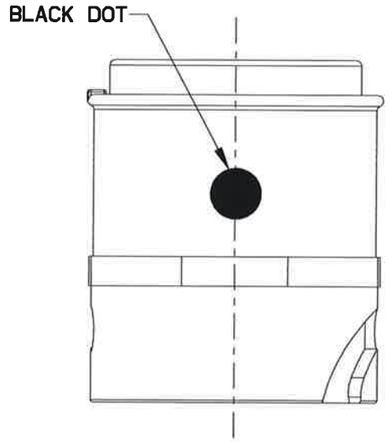

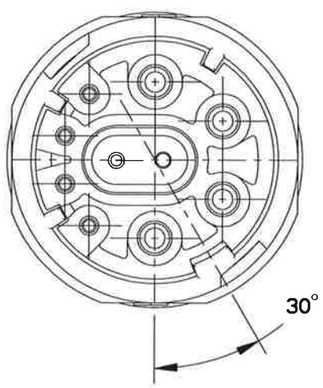

NOTES:
1. MATERIALS:
   HOUSING: PA6/6
   CONTACT RETAINER: STAINLESS STEEL
   GROMMET: SILICONE RUBBER PER A-A-59588
2. MATING CONTACT: SEE TABLE I.
3. PART MATES WITH SJS861100/101
4. WEIGHT: 3.2 GRAMS
5. SUPPLIED WITH DUST CAP.

TABLE I - PART NUMBER SCHEME		
APCD P/N	CONTACTS SUPPLIED	PART MARKING
SJS861200	NONE	SJS861200
SJS861201	(6) M39029/58-360 (4) M39029/58-364	

DIMENSIONS	TOLERANCES	PROJECTION
ANSI Y14.5M UNITS: INCHES Pro/E FILE	.XX ±0.01 .XXX ±0.005 ANGLES ±2.0°	

ORIGINAL

THIS DOCUMENT CONTAINS PROPRIETARY INFORMATION WHICH IS THE CONFIDENTIAL PROPERTY OF AMPHENOL PCD INC., BEVERLY, MA

Amphenol Pcd
SPECIFICATION DRAWING

ENGR WESLEY YU 15-Jan-09
CHKD 6/14/13
APPD 6/26/13

TITLE
4P SZ16 & 6P SZ22 WHITE RECEPTACLE FOR SJS

SIZE	DWG NO.	REV
B	SJS861200_CE	A

CODE: 58982 SCALE: 3:1 SHEET 1 OF 1

SJS861200
SJS861200