SJS840410P

TABLE I - PART NO. SCHEME				
APCD P/N	CONTACTS SUPPLIED	KEY CONFIGURATION	MATING RECEPTACLE	PART MARKING
SJS840410P	NONE	KEY A	SJS840400P/401P SJS804760P/761P/762P SJS804790P/791P	SJS840410P
SJS840411P	(4) M39029/57-358			
SJS840440P	NONE	KEY B	SJS840450P/451P	SJS840440P
SJS840441P	(4) M39029/57-358			

REV	ECN	APP'D
-	7815	JT 8/29/16
A	8043	MS 8/21/17

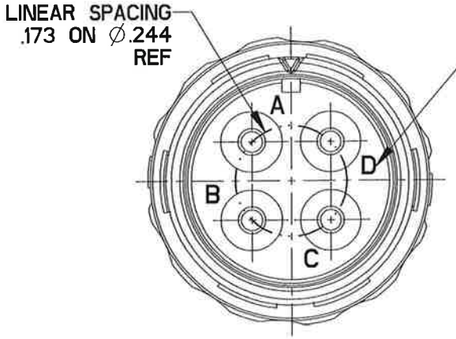

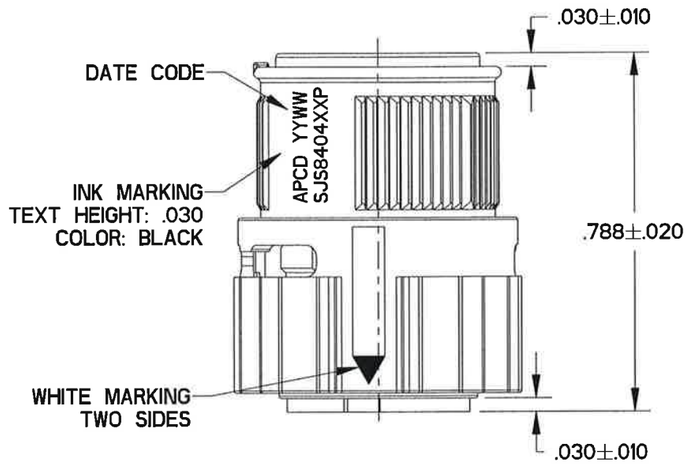

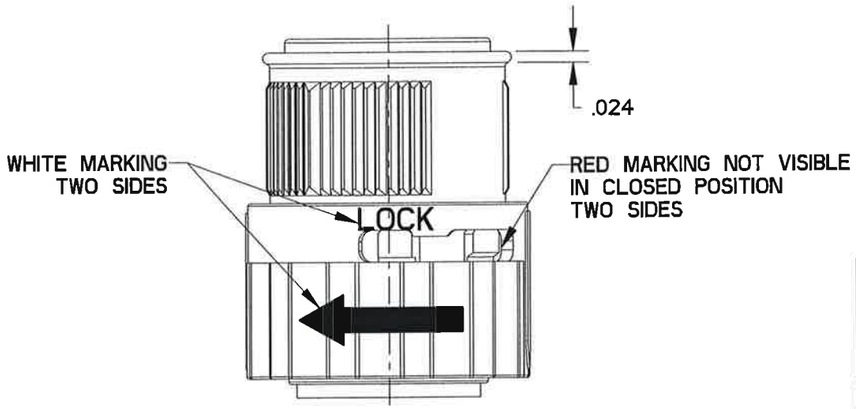

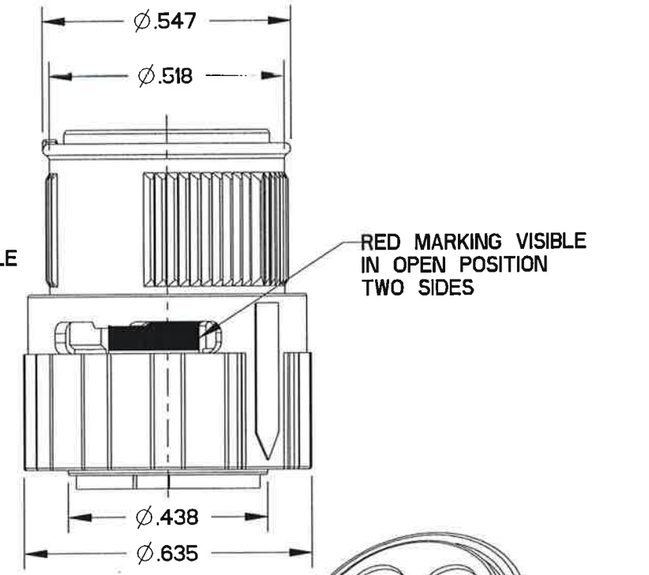

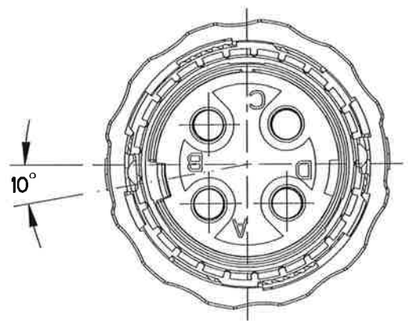

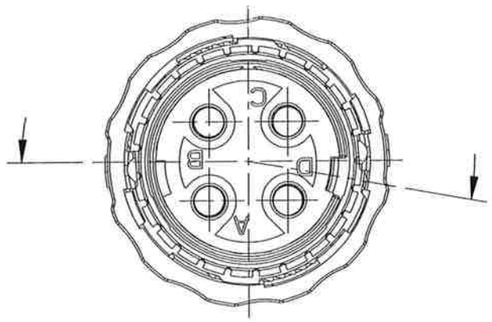

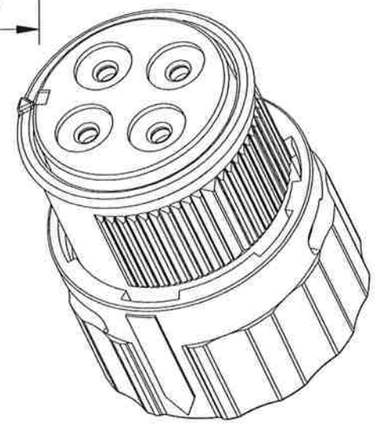

NOTES:
1. MATERIAL:
   OUTER HOUSING: POLYETHERIMIDE.
   INNER HOUSING: POLYETHERIMIDE.
   COUPLING NUT: PA66.
   CONTACT RETAINER: STAINLESS STEEL.
   EMI SPRING: BERYLLIUM COPPER
   GROMMET: SILICONE RUBBER PER A-A-59588
2. FINISH:
   OUTER HOUSING: NICKEL, 200 MICROINCHES MINIMUM
   OVER COPPER, 120 MICROINCHES MINIMUM
   EMI SPRING: NICKEL, 30 MICROINCHES MINIMUM (A)
3. ACCEPTS M39029/57-358 SOCKET CONTACTS
4. ESTIMATED WEIGHT: 3.5g
5. SUPPLIED WITH DUST CAP.

DIMENSIONS	TOLERANCES	PROJECTION
ANSI Y14.5M UNITS: INCHES Pro/E FILE	.XX ±0.01 .XXX ±0.005 ANGLES ±2.0°	

ORIGINAL

THIS DOCUMENT CONTAINS PROPRIETARY INFORMATION WHICH IS THE CONFIDENTIAL PROPERTY OF AMPHENOL PCD INC., BEVERLY, MA

Amphenol Pcd
SPECIFICATION DRAWING

ENGR ANDREW.WANG May-09-16
CHKD 9/12/17
APPD 8/31/17

TITLE
INLINE PLUG
SHELL SIZE 8 SJS PEGASUS
4 POS SIZE 16

SIZE	DWG NO.	REV
B	SJS840410P	A

CODE: 58982 SCALE: 3:1 SHEET 1 OF 1

SJS840410P
SJS840410P