REV	ECN	APP'D
-	7815	8/22/16

TABLE I - PART NO. SCHEME				
APCD P/N	CONTACTS SUPPLIED	MATING PLUG	KEY CONFIGURATION	PART MARKING
SJS840400P	NONE	SJS840410P SJS840411P	KEY A	SJS840400P
SJS840401P	(4) M39029/58-364			
SJS840450P	NONE	SJS840440P SJS840441P	KEY B	SJS840450P
SJS840451P	(4) M39029/58-364			

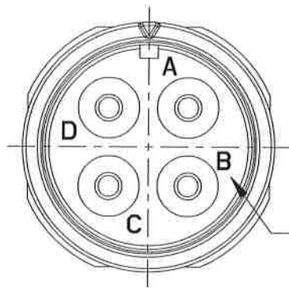

GROMMET MARKING
TEXT HEIGHT: .040
COLOR: CONTRASTING

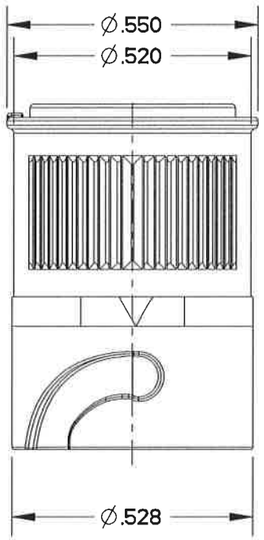

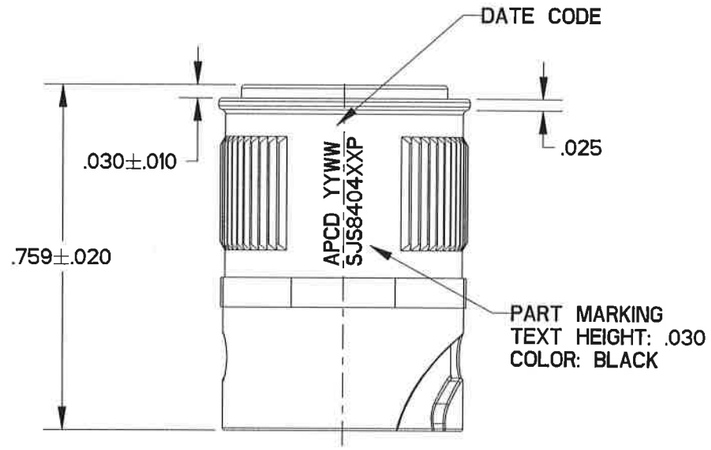

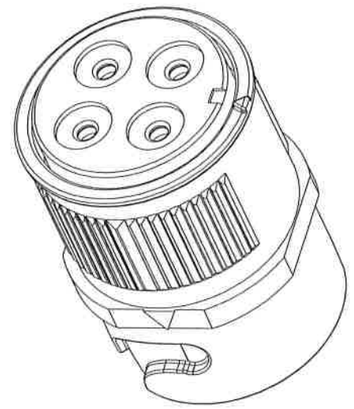

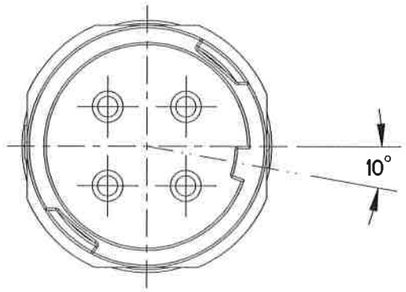

KEY B

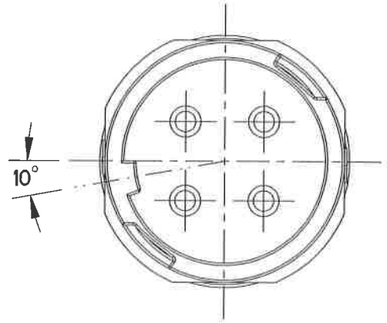

KEY A

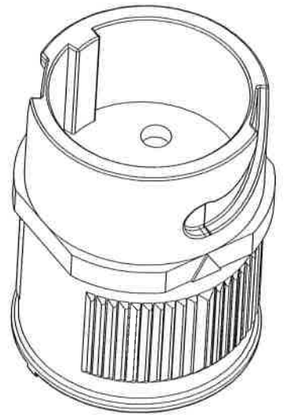

NOTES:
1. MATERIALS:
   OUTER HOUSING: POLYETHERIMIDE
   INNER HOUSING: POLYETHERIMIDE
   CONTACT RETAINER: STAINLESS STEEL
   GROMMET: SILICONE RUBBER PER A-A-59588
2. FINISH:
   OUTER HOUSING: NICKEL, 200 MICROINCHES MINIMUM
   OVER COPPER, 120 MICROINCHES MINIMUM
3. ACCEPTS M39029/58-364 PIN CONTACTS
4. SUPPLIED WITH DUST CAP
5. ESTIMATED WEIGHT: 2.3g

DIMENSIONS	TOLERANCES	PROJECTION
ANSI Y14.5M	.XX ±0.01	
UNITS: INCHES	.XXX ±0.005	
Pro/E FILE	ANGLES ±2.0°	

ORIGINAL

THIS DOCUMENT CONTAINS PROPRIETARY INFORMATION WHICH IS THE CONFIDENTIAL PROPERTY OF AMPHENOL PCD INC., BEVERLY, MA

Amphenol Pcd
SPECIFICATION DRAWING

ENGR ANDREW.WANG Jul-13-16
CHKD 8/29/16
APPD 8/22/16

TITLE
INLINE RECEPTACLE
SHELL SIZE 8 SJS PEGASUS
4 POS SIZE 16

SIZE	DWG NO.	REV
B	SJS840400P	-

CODE: 58982 | SCALE: 3:1 | SHEET 1 OF 1

SJS840400P
SJS840400P