SJS830270P-N

TABLE I - PART NUMBER SCHEME			
PART NO.	CONTACTS SUPPLIED	PART MARKING	MATING INLINE PLUG
SJS830270P-N	NONE	SJS830270P-N	SJS830250P-N SJS830251P-N
SJS830271P-N	(2) M39029/58-360		

REV	ECN	APP'D
-	8204	MD 12/5/17
A	8234	MD 1/24/18
B	8512	MD 1/16/19
C	8568	MD 28 March 2019

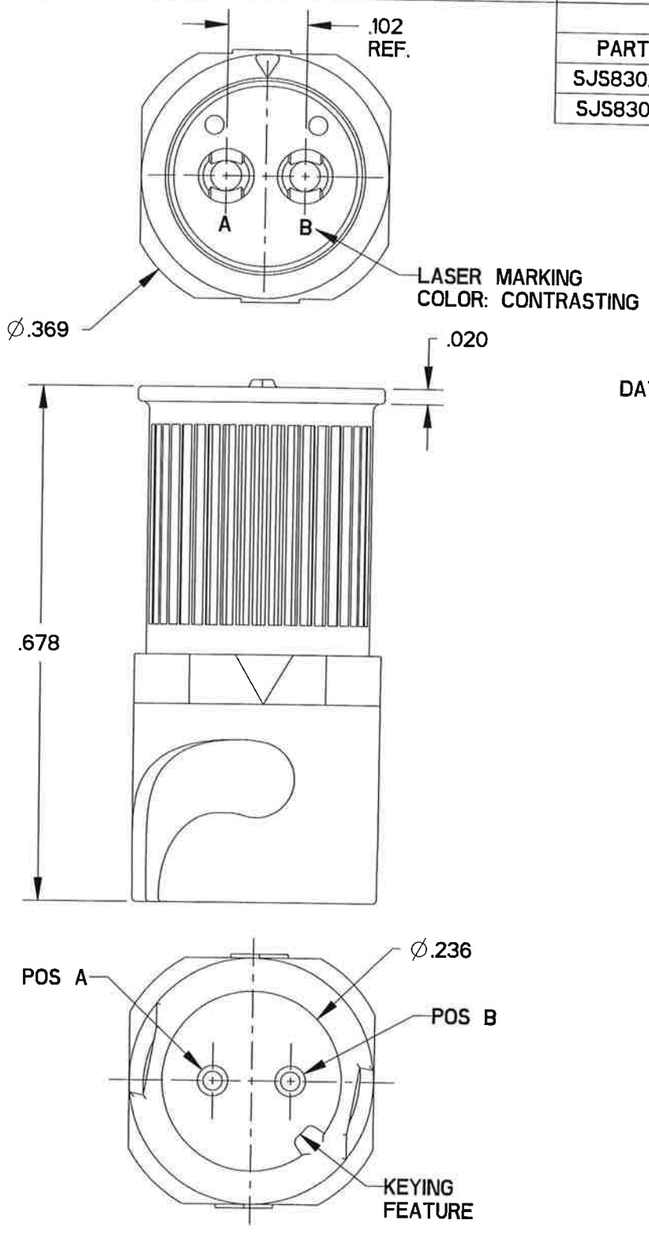

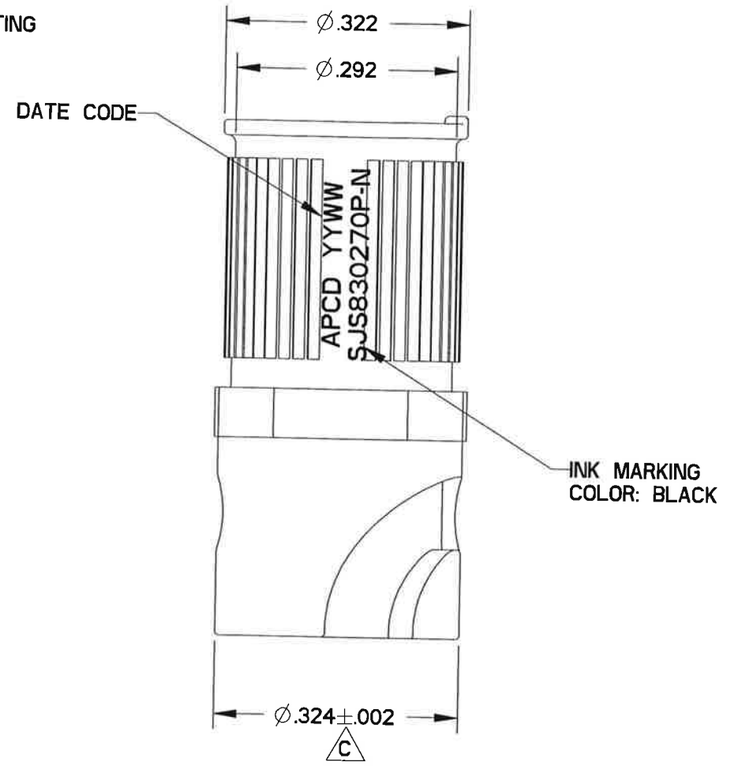

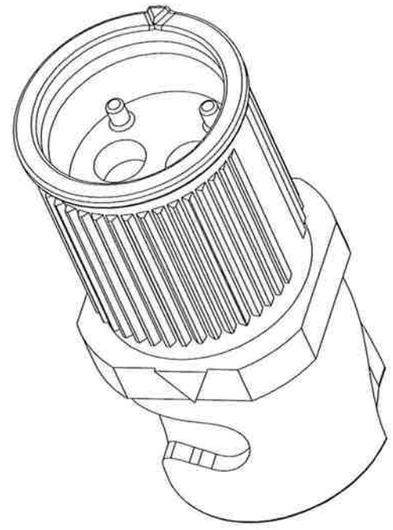

B MATING FACE VIEW

NOTES:
1. MATERIALS:
   HOUSING: POLYETHERIMIDE
   CONTACT RETAINER: STAINLESS STEEL
2. HOUSING: NICKEL, 200 MICROINCHES MINIMUM OVER COPPER, 120 MICROINCHES MINIMUM
3. PART ACCEPTS PIN CONTACTS PER TABLE I (A)
4. DIELECTRIC WITHSTANDING VOLTAGE: 1500VRMS AT 60Hz PER EIA-364-20
5. INSULATION RESISTANCE: 5000MΩ MINIMUM AT 500VDC PER EIA-364-21
6. MATING PART(S) PER TABLE I
7. EST. WEIGHT: 1 GRAM
8. SUPPLIED WITH DUST CAP.
9. MATING TORQUE: 1.5 IN-LBF MAX. (C)

DIMENSIONS ANSI Y14.5M UNITS: INCHES Pro/E FILE	TOLERANCES .XX ±0.01 .XXX ±0.005 ANGLES ±2.0°	PROJECTION	Amphenol Pcd CUSTOMER DRAWING ENGR M. DiGIACOMO 8 NOV 2017 CHKD 3/27/19 APPD 28 March 2019	TITLE INLINE RECEPTACLE, NON-ENVIRONMENTAL SHELL SIZE 5 SJS PEGASUS 2 POSITIONS SIZE 22
ORIGINAL	THIS DOCUMENT CONTAINS PROPRIETARY INFORMATION WHICH IS THE CONFIDENTIAL PROPERTY OF AMPHENOL PCD INC., BEVERLY, MA		SIZE B CUSTOMER DWG NO. SJS830270P-N REV C CODE: 58982 SCALE: 5:1 SHEET 1 OF 1	

SJS830270P-N
SJS830270P-N