SJS830250P		
PART NO.	CONTACTS SUPPLIED	PART MARKING
SJS830250P	NONE	SJS830250P
SJS830251P	(2) M39029/57-354	

REV	ECN	APP'D
-	7480	JT 4/14/15
A	8043	MD 8/31/17
B	8250	MD 12/2/17
C	8568	MA 28 MARCH 2019

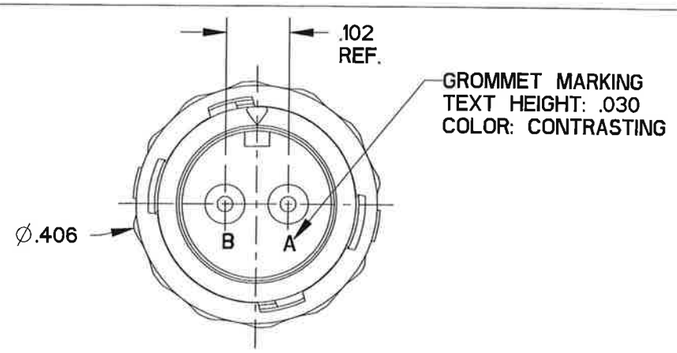

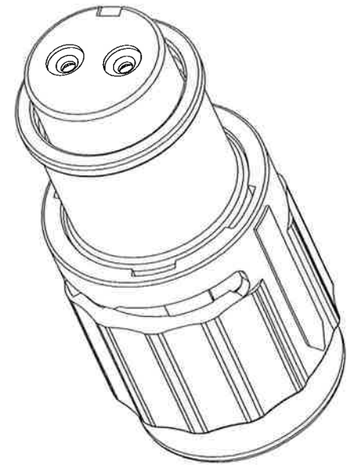

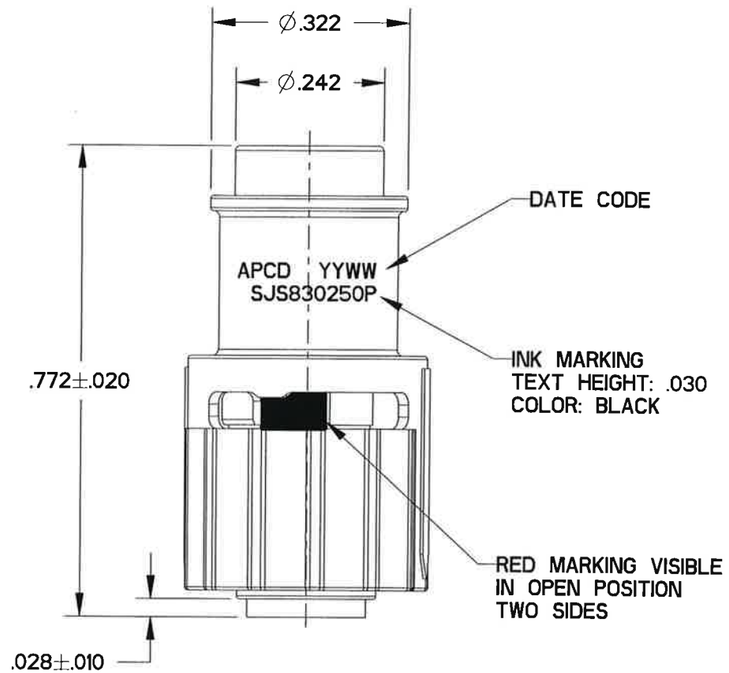

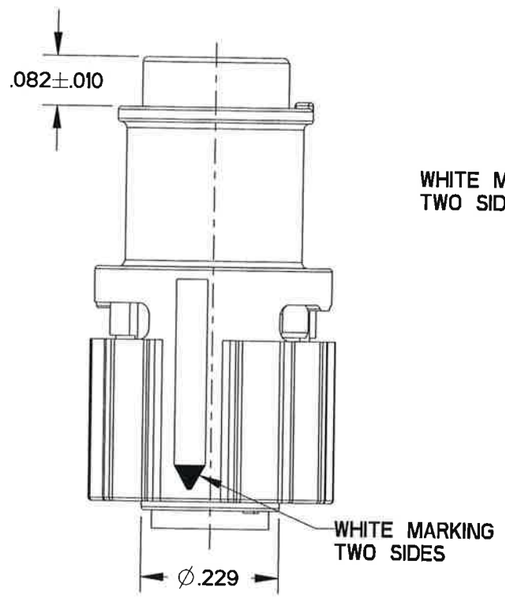

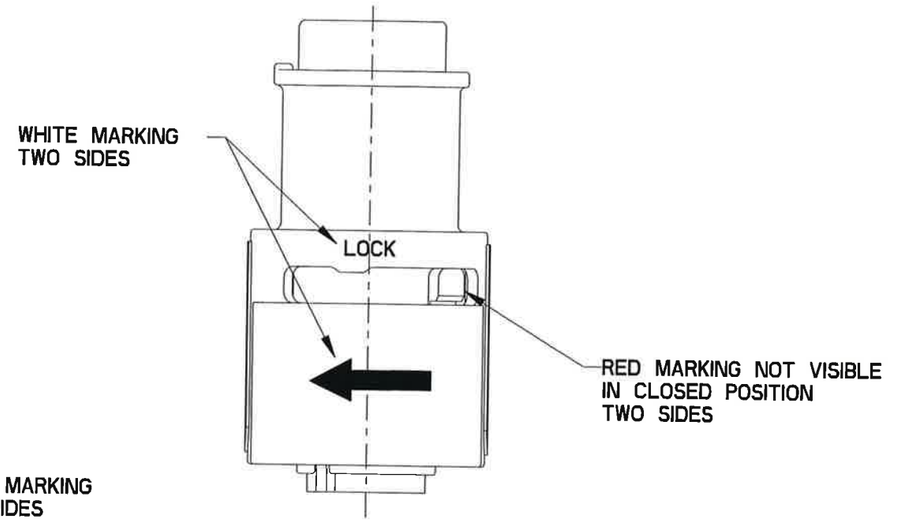

NOTES:
1. MATERIALS:
   HOUSING: POLYETHERIMIDE
   CONTACT RETAINER: STAINLESS STEEL
   GROMMET & FACE SEAL: SILICONE RUBBER PER A-A-59588
   EMI SPRING: BERYLLIUM COPPER
2. HOUSING: NICKEL, 200 MICROINCHES MINIMUM
   OVER COPPER, 120 MICROINCHES MINIMUM
   EMI SPRING: NICKEL, 30 MICROINCHES MINIMUM
3. PART ACCEPTS SOCKET CONTACTS PER M39029/57-354
4. PART MATES WITH SJS830270P/271P
5. EST. WEIGHT: 1.5 GRAMS
6. SUPPLIED WITH DUST CAP.
7. MATING TORQUE: 1.5 IN-LBF MAX (C)

DIMENSIONS	TOLERANCES	PROJECTION	Amphenol Pcd	TITLE
ANSI Y14.5M UNITS: INCHES Pro/E FILE	.XX ±0.01 .XXX ±0.005 ANGLES ±2.0°		CUSTOMER DRAWING ENGR ANDREW.WANG Feb-28-15 CHKD 3/27/19 APPD 28 March 2019	INLINE PLUG SHELL SIZE 5 SJS PEGASUS 2 POSITIONS SIZE 22
ORIGINAL	THIS DOCUMENT CONTAINS PROPRIETARY INFORMATION WHICH IS THE CONFIDENTIAL PROPERTY OF AMPHENOL PCD INC., BEVERLY, MA			SIZE B · CUSTOMER DWG NO. SJS830250P · REV C CODE: 58982 · SCALE: 4:1 · SHEET 1 OF 1

SJS830250P

SJS830250P