SJS830230P-N

| TABLE I - PART NUMBER SCHEME | | | |
|---|---|---|---|
| PART NO. | CONTACTS SUPPLIED | PART MARKING | MATING INLINE PLUG |
| SJS830230P-N | NONE | SJS830230P-N | SJS830210P-N<br>SJS830211P-N |
| SJS830231P-N | (3) M39029/58-360 | | |

| REV | ECN | APP'D |
|---|---|---|
| - | 8204 | MD 12/5/17 |
| A | 8234 | MD 1/24/18 |

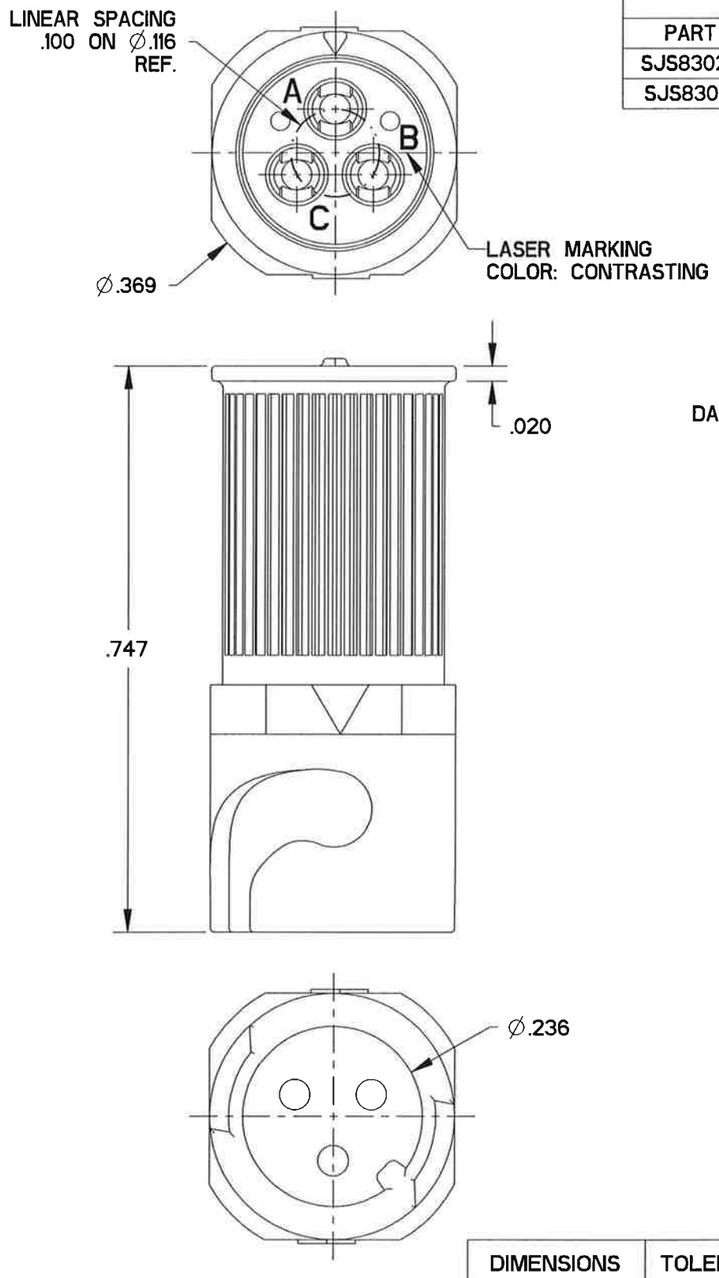


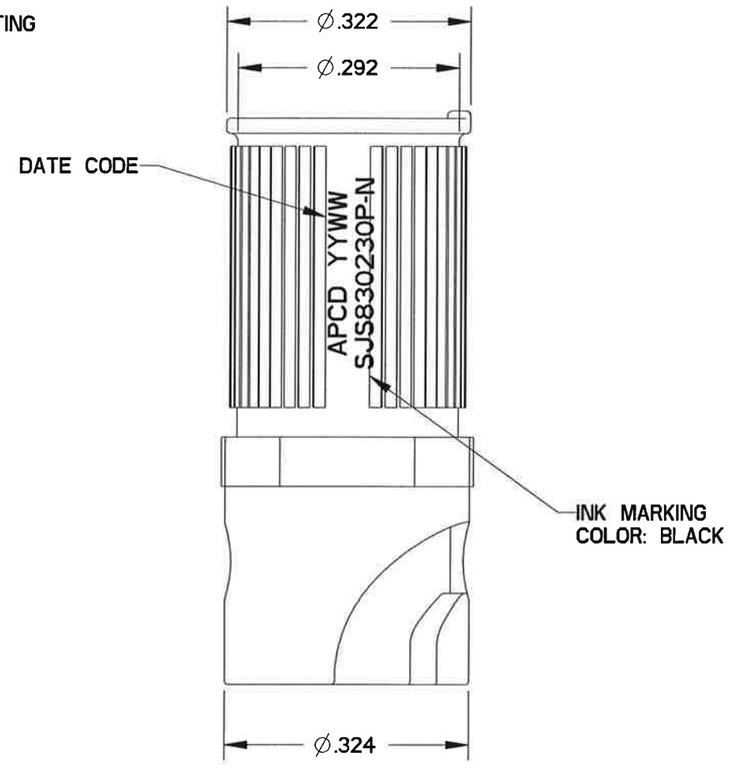


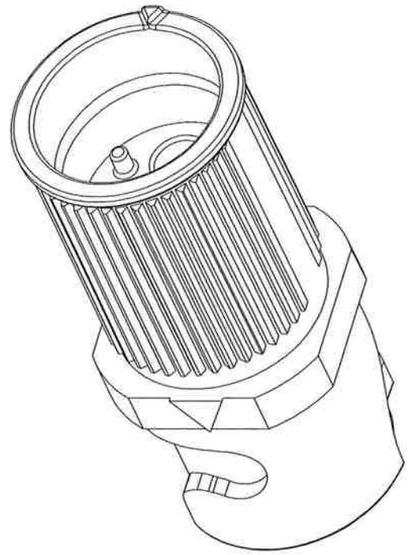

NOTES:
1. MATERIALS:
   HOUSING: POLYETHERIMIDE
   CONTACT RETAINER: STAINLESS STEEL
2. HOUSING: NICKEL, 200 MICROINCHES MINIMUM
   OVER COPPER, 120 MICROINCHES MINIMUM
3. PART ACCEPTS PIN CONTACTS PER TABLE I (A)
4. DIELECTRIC WITHSTANDING VOLTAGE: 1500VRMS AT 60Hz PER EIA-364-20
5. INSULATION RESISTANCE: 5000MΩ MINIMUM AT 500VDC PER EIA-364-21
6. MATING PART(S) PER TABLE I
7. EST. WEIGHT: 1 GRAM
8. SUPPLIED WITH DUST CAP.

| DIMENSIONS | TOLERANCES | PROJECTION |
|---|---|---|
| ANSI Y14.5M | .XX ±0.01 | |
| UNITS: INCHES | .XXX ±0.005 | |
| Pro/E FILE | ANGLES ±2.0° | |

ORIGINAL

THIS DOCUMENT CONTAINS PROPRIETARY INFORMATION WHICH IS THE CONFIDENTIAL PROPERTY OF AMPHENOL PCD INC., BEVERLY, MA

Amphenol Pcd
SPECIFICATION DRAWING

ENGR M. DiGIACOMO 9 NOV 2017

CHKD 1/24/18

APPD 1/24/18

TITLE
INLINE RECEPTACLE, NON-ENVIRONMENTAL
SHELL SIZE 5 SJS PEGASUS
3 POS SIZE 22

| SIZE | DWG NO. | REV |
|---|---|---|
| B | SJS830230P-N | A |

CODE: 58982 SCALE: 5:1 SHEET 1 OF 1

SJS830230P-N
SJS830230P-N