SJS830210P-N

TABLE I - PART NUMBER SCHEME			
PART NO.	CONTACTS SUPPLIED	PART MARKING	MATING RECEPTACLE
SJS830210P-N	NONE	SJS830210P-N	SJS830230P-N SJS830231P-N
SJS830211P-N	(3) M39029/57-354		

REV	ECN	APP'D
-	8204	MD 12/5/17

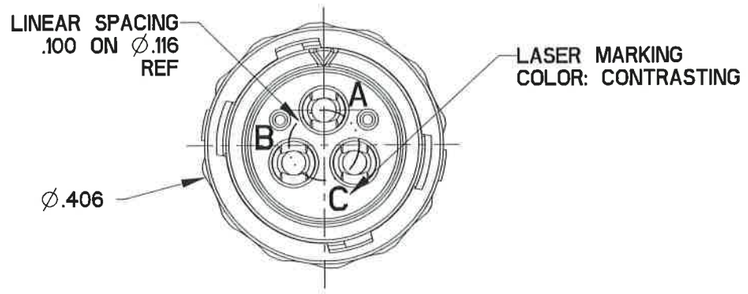

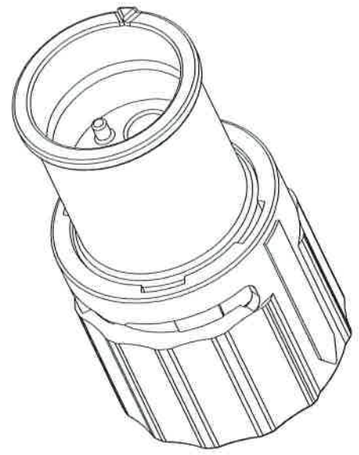

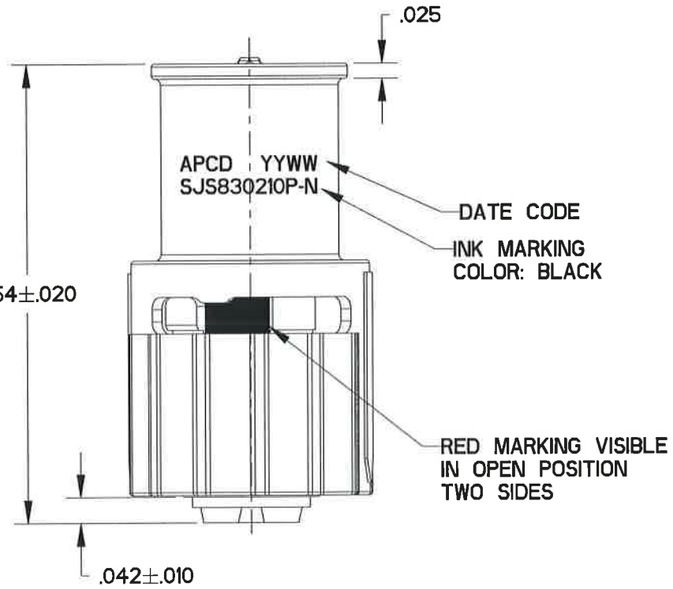

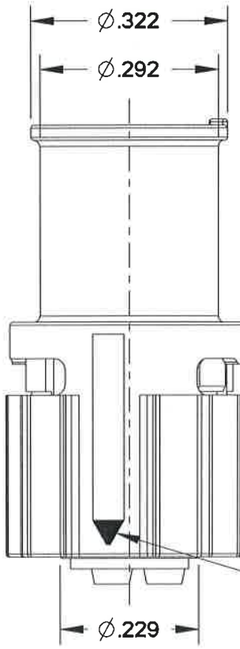

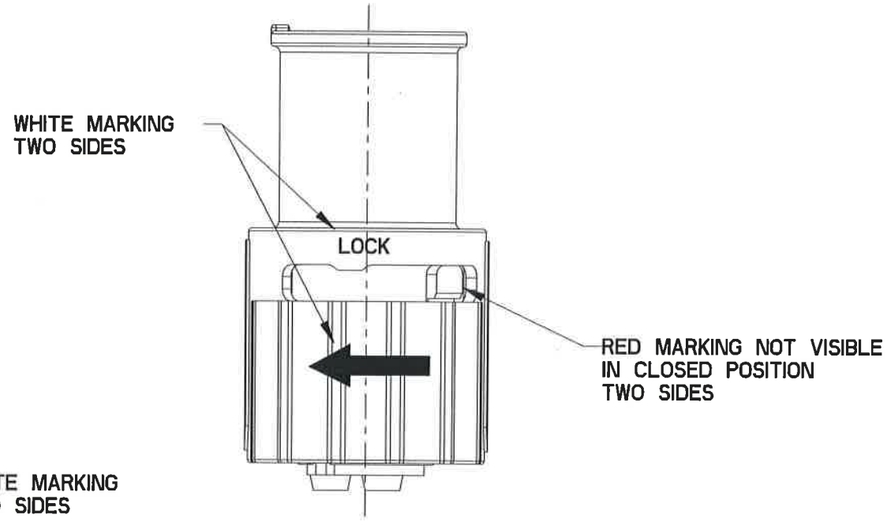

NOTES:
1. MATERIALS:
   HOUSING: POLYETHERIMIDE
   CONTACT RETAINER: STAINLESS STEEL
   FACE SEAL: SILICONE RUBBER PER A-A-59588, COLOR: RED
   EMI SPRING: BERYLLIUM COPPER
   COUPLING NUT: PA66 NYLON, COLOR: BLACK
2. HOUSING: NICKEL, 200 MICROINCHES MINIMUM
   OVER COPPER, 120 MICROINCHES MINIMUM
   EMI SPRING: NICKEL, 30 MICROINCHES MINIMUM
3. PART ACCEPTS SOCKET CONTACTS PER TABLE I
4. DIELECTRIC WITHSTANDING VOLTAGE: 1500VRMS AT 60Hz PER EIA-364-20
5. INSULATION RESISTANCE: 5000MΩ MINIMUM AT 500VDC PER EIA-364-21
6. MATING PART(S) PER TABLE I
7. EST. WEIGHT: 1.3 GRAMS
8. SUPPLIED WITH DUST CAP.

DIMENSIONS	TOLERANCES	PROJECTION
ANSI Y14.5M	.XX ±0.01	
UNITS: INCHES	.XXX ±0.005	
Pro/E FILE	ANGLES ±2.0°	

ORIGINAL

THIS DOCUMENT CONTAINS PROPRIETARY INFORMATION WHICH IS THE CONFIDENTIAL PROPERTY OF AMPHENOL PCD INC., BEVERLY, MA

Amphenol Pcd
SPECIFICATION DRAWING

ENGR M. DiGIACOMO 9 NOV 2017
CHKD 12/5/17
APPD 12/5/17

TITLE
INLINE PLUG, NON-ENVIRONMENTAL
SHELL SIZE 5 SJS PEGASUS
3 POS SIZE 22

SIZE	DWG NO.	REV
B	SJS830210P-N	-

CODE: 58982 SCALE: 4:1 SHEET 1 OF 1

SJS830210P-N
SJS830210P-N