SJS704110P_C

TABLE 1 - PART NO. SCHEME		
APCD P/N	CONTACTS SUPPLIED	PART MARKING
SJS704110P	NONE	SJS704110P
SJS704111P	(4) M39029/57-357	

REV	ECN	APP'D
-	7824	JT 9/7/16
A	8043	MD 8/31/17
B	10224	VN 2025.11.03 11:50:31 -05'00'

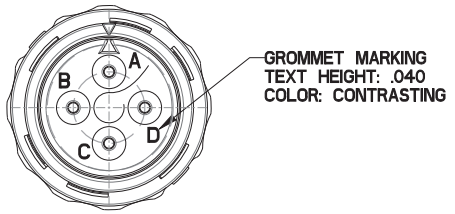

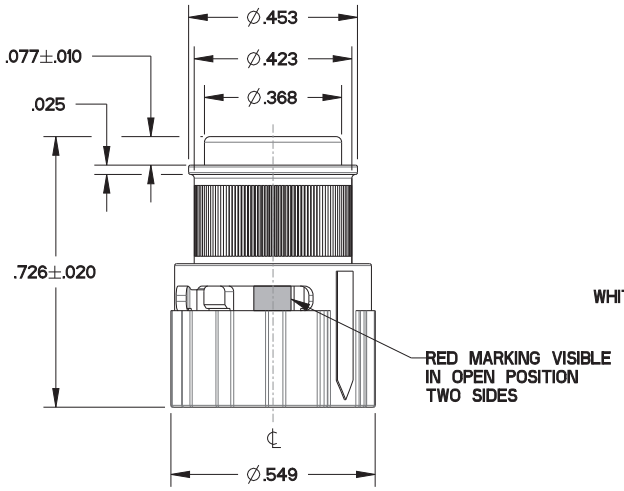

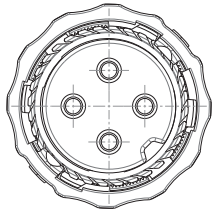

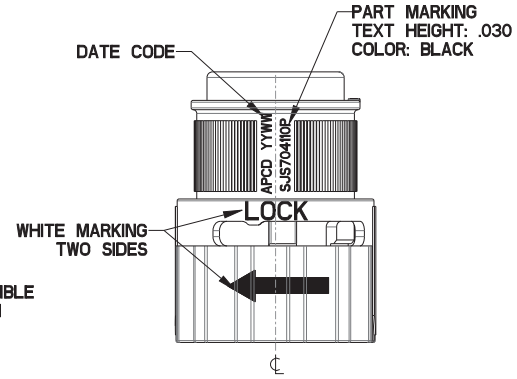

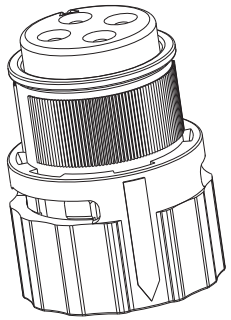

NOTES:
1. MATERIALS:
   HOUSING: POLYETHERIMIDE, COLOR: BLACK
   COUPLING NUT: PA66, COLOR: BLACK
   CONTACT RETAINER: STAINLESS STEEL
   GROMMET: SILICONE RUBBER PER A-A-59588, COLOR: RED
   EMI SPRING: BERYLLIUM COPPER
2. FINISH:
   HOUSING: NICKEL, 200 MICROINCHES MINIMUM
   OVER COPPER, 120 MICROINCHES MINIMUM
   EMI SPRING: NICKEL, 30 MICROINCHES MINIMUM
3. PART ACCEPTS SOCKET CONTACTS PER: M39029/57-357
4. PART MATES WITH SJS704120P/SJS704121P.
5. EST. WEIGHT: 2.3g
6. SUPPLIED WITH DUST CAP.

DIMENSIONS	TOLERANCES	PROJECTION
ANSI Y14.5M	.XX ±0.01	
UNITS: INCHES	.XXX ±0.005	
Pro/E FILE	ANGLES ±2.0°	

ORIGINAL

THIS DOCUMENT CONTAINS PROPRIETARY INFORMATION WHICH IS THE CONFIDENTIAL PROPERTY OF AMPHENOL PCD INC., BEVERLY, MA

Amphenol Pcd
CUSTOMER DRAWING

ENGR T. BLATZ AUG-7-2025
CHKD Bucci, Carina Date: 2025.10.20 11:17:57 -04'00'
APPD Date: 2025.11.03 11:50:15 -05'00'

TITLE
INLINE PLUG
SHELL SIZE 7 SJS PEGASUS
4 POS SIZE 20

SIZE	DWG NO.	REV
B	SJS704110P_C	B

CODE: 58982 SCALE: 3:1 SHEET 1 OF 1

SJS704110P_C

SJS704110P