SJS502190P

TABLE I - PART NUMBER SCHEME		
PART NO.	CONTACTS SUPPLIED	PART MARKING
SJS502190P	NONE	SJS502190P
SJS502191P	(2) M39029/58-360	

REV	ECN	APP'D
-	7853	JT 10/26/16
A	8833	MD 2 Jan 2020

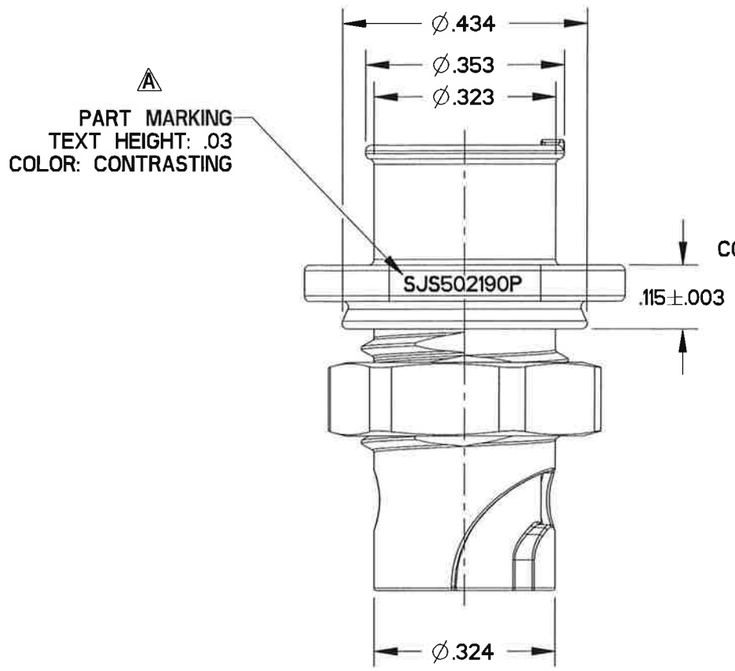

O-RING NOT SHOWN FOR VERTICAL MOUNTING DIMENSION CLARIFICATION

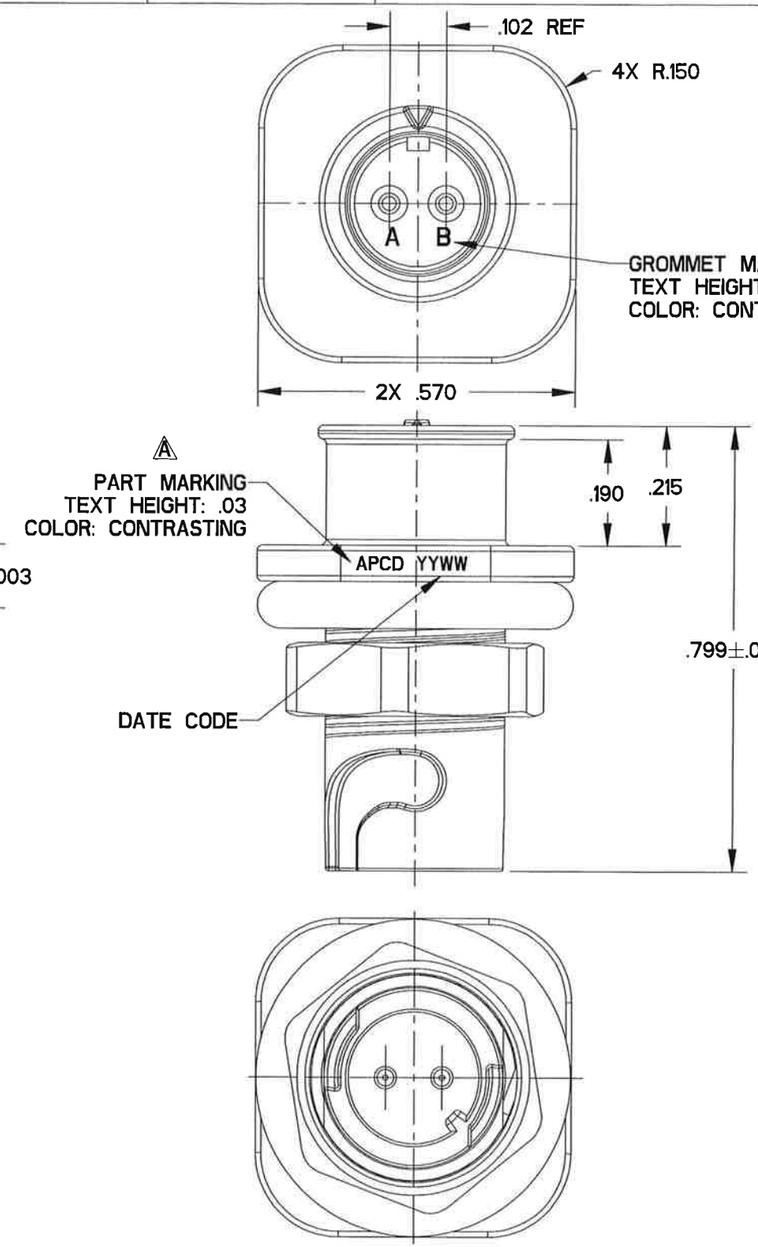

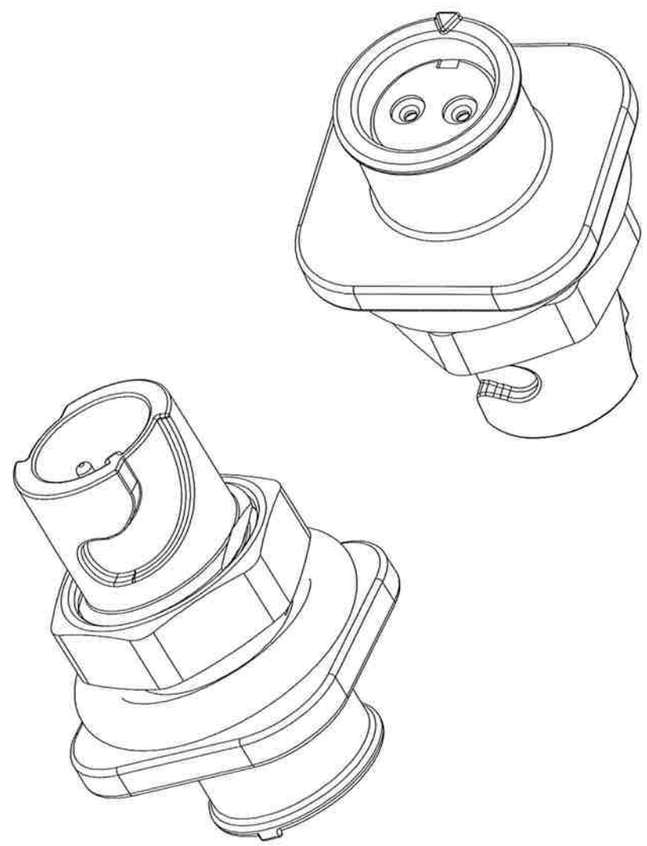

NOTES:
1. MATERIALS:
   HOUSING: POLYETHERIMIDE
   CONTACT RETAINER: STAINLESS STEEL
   JAM NUT: ALUMINUM ALLOY
   O-RING: CONDUCTIVE SILICONE RUBBER, COLOR: GRAY
   GROMMET: SILICONE RUBBER PER A-A-59588, COLOR: RED
2. FINISH:
   HOUSING: NICKEL, 200 MICROINCHES MINIMUM
   OVER COPPER, 120 MICROINCHES MINIMUM
3. ACCEPTS CONTACTS PER TABLE I.
4. MATES WITH INLINE PLUG(S) SJS830250P/251P
5. WEIGHT: 1.7 GRAMS
6. SUPPLIED WITH DUST CAP.

DIMENSIONS	TOLERANCES	PROJECTION
ANSI Y14.5M	.XX ±0.01	
UNITS: INCHES	.XXX ±0.005	
Pro/E FILE	ANGLES ±2.0°	

ORIGINAL

THIS DOCUMENT CONTAINS PROPRIETARY INFORMATION WHICH IS THE CONFIDENTIAL PROPERTY OF AMPHENOL PCD INC., BEVERLY, MA

Amphenol Pcd
CUSTOMER DRAWING

ENGR ANDREW.WANG Mar-11-16
CHKD 12/18/19
APPD 2 Jan 2020

TITLE
JAMNUT REAR MOUNT RECEPTACLE
SHELL SIZE 5 SJS PEGASUS
2 POSITION SIZE 22

SIZE	CUSTOMER DWG NO.	REV
B	SJS502190P	A

CODE: 58982 SCALE: 11:3 SHEET 1 OF 2

SJS502190P
SJS502190P

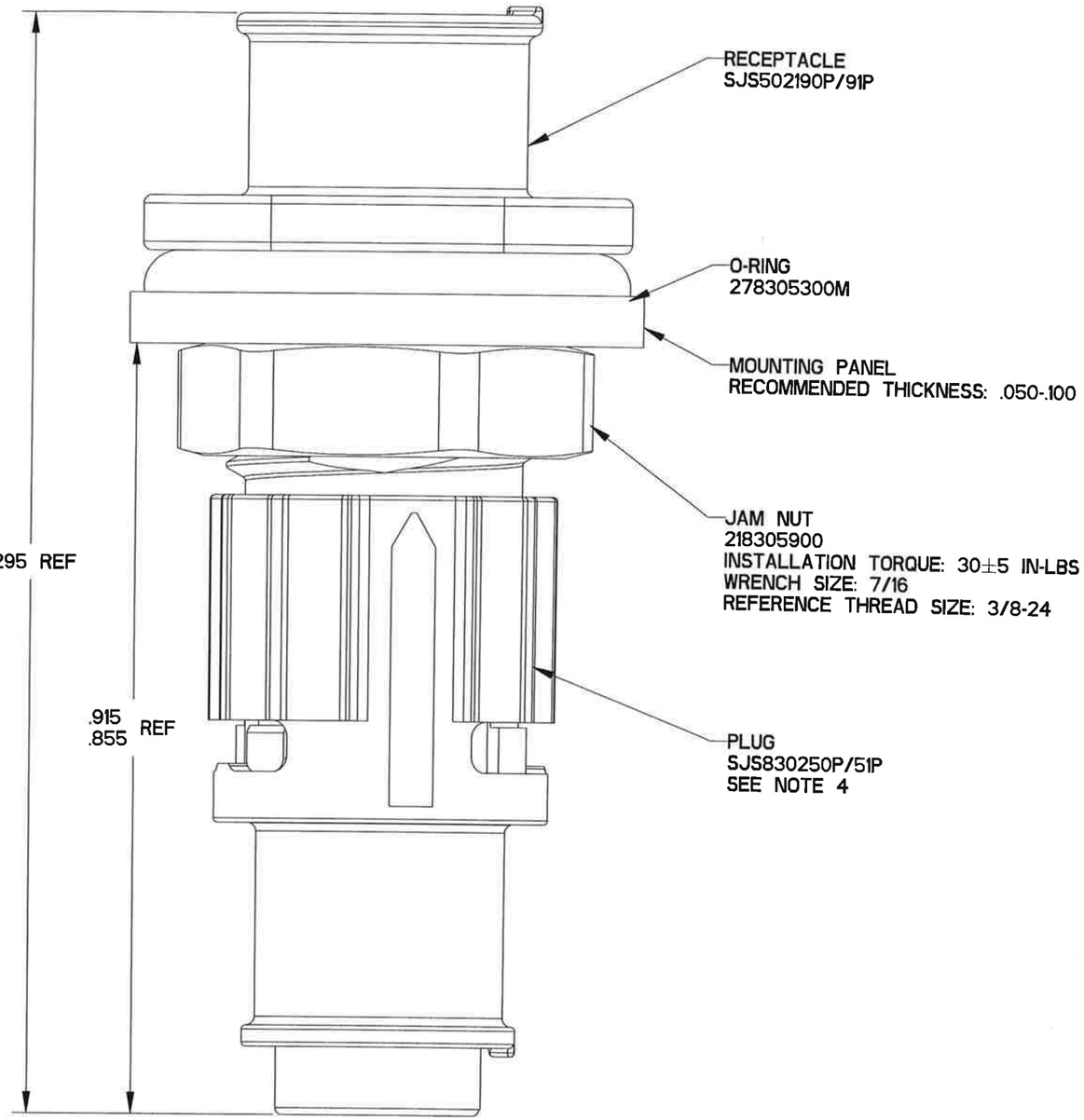

MOUNTING INSTRUCTIONS
SCALE 6:1

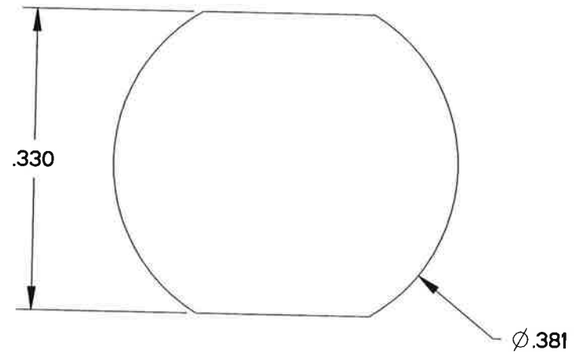

MOUNTING PANEL CUTOUT
SCALE 6:1

SIZE	DWG NO.	REV
B	SJS502190P	A
CODE: 58982	SCALE: 1:3	SHEET 2 OF 2

SJS502190P
SJS502190P