SJS502170P

TABLE I - PART NUMBER SCHEME		
PART NO.	CONTACTS SUPPLIED	PART MARKING
SJS502170P	NONE	SJS502170P
SJS502171P	(2) M39029/58-360	

REV	ECN	APP'D
-	7853	10/26/16

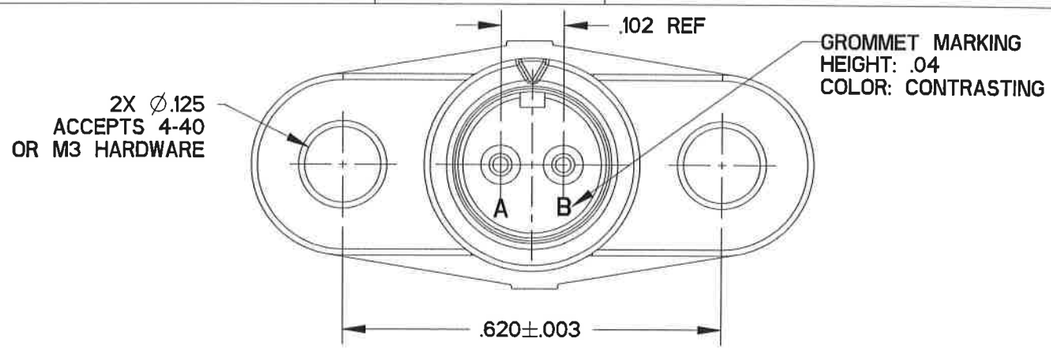

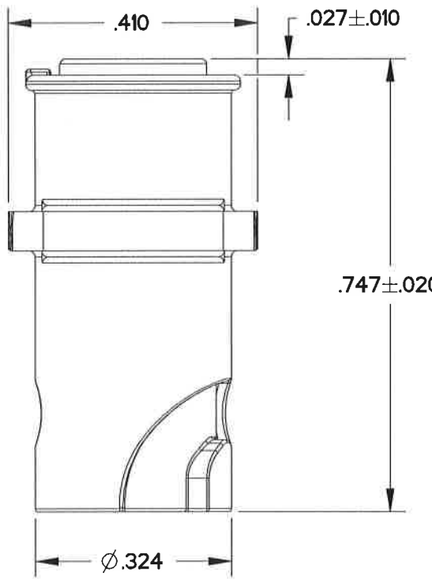

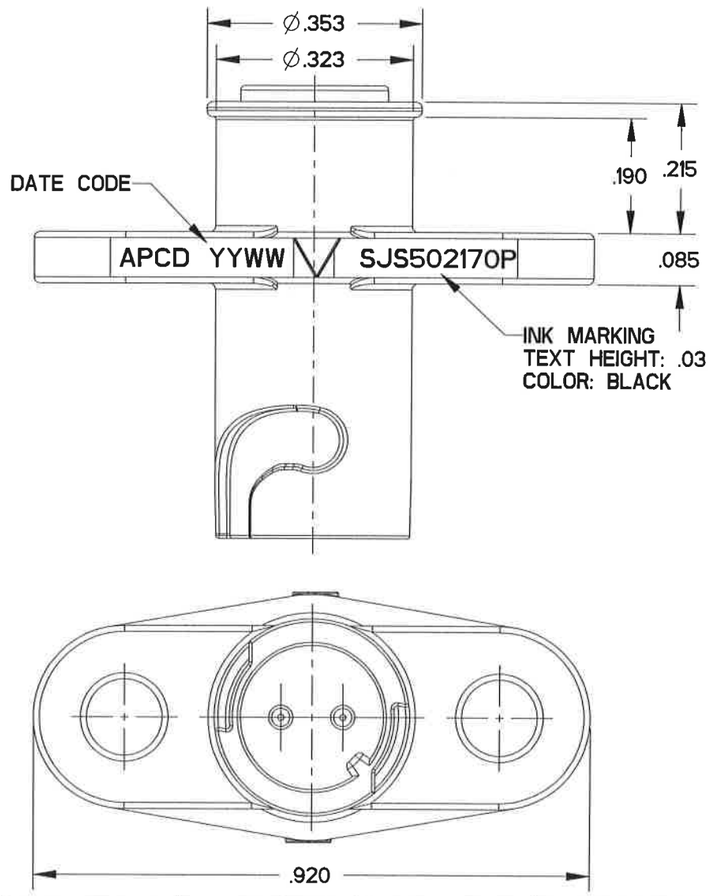

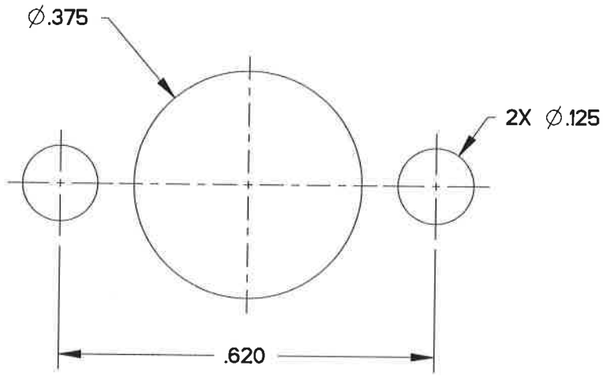

RECOMMENDED PANEL CUTOUT
PANEL THICKNESS: .050 - .100

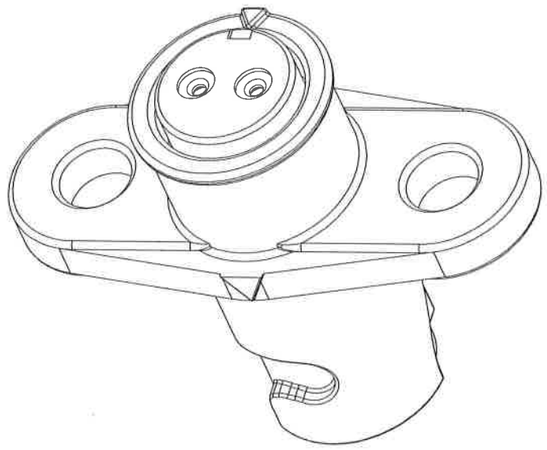

NOTES:
1. MATERIALS:
   HOUSING: POLYETHERIMIDE
   CONTACT RETAINER: STAINLESS STEEL
   GROMMET: SILICONE RUBBER PER A-A-59588, COLOR: RED
2. FINISH:
   HOUSING: NICKEL, 200 MICROINCHES MINIMUM
   OVER COPPER, 120 MICROINCHES MINIMUM
3. ACCEPTS CONTACTS PER TABLE I.
4. PART MATES WITH INLINE PLUG(S) SJS830250P/251P
5. WEIGHT: 1.5 GRAMS
6. SUPPLIED WITH DUST CAP.

DIMENSIONS	TOLERANCES	PROJECTION
ANSI Y14.5M	.XX ±0.01	
UNITS: INCHES	.XXX ±0.005	
Pro/E FILE	ANGLES ±0.5°	

ORIGINAL

THIS DOCUMENT CONTAINS PROPRIETARY INFORMATION WHICH IS THE CONFIDENTIAL PROPERTY OF AMPHENOL PCD INC., BEVERLY, MA

Amphenol Pcd
SPECIFICATION DRAWING

ENGR ANDREW.WANG Mar-11-16

CHKD 10/25/16

APPD 10/26/16

TITLE
OVAL FLANGE RECEPTACLE
SHELL SIZE 5 SJS PEGASUS
2 POSITION SIZE 22

SIZE	DWG NO.	REV
B	SJS502170P	-

CODE: 58982 SCALE: 4:1 SHEET 1 OF 1

SJS502170P
SJS502170P