TABLE I - PART NUMBER SCHEME					
APCD P/N LESS CONTACTS	APCD P/N WITH CRIMP CONTACTS	PART MARKING	MATING INLINE PLUG	KEY	INNER HOUSING COLOR
SJS425120P	SJS425121P	SJS425120P	SJS425110P	A	BLACK
SJS425220P	SJS425221P	SJS425220P	SJS425210P	B	GREEN
SJS425320P	SJS425321P	SJS425320P	SJS425310P	C	WHITE
SJS425420P	SJS425421P	SJS425420P	SJS425410P	D	YELLOW

SJS425120P

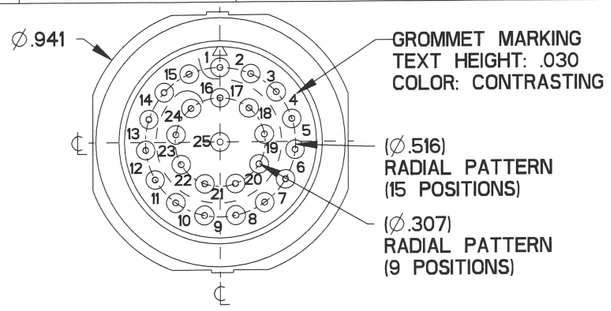

MASTER COPY

REV	ECN	APP'D
-	7463	JT 4/15/15
A	7522	JT 5/15/15
B	7859	JT 12/2/16
C	10353	MD 22 JUN 2026

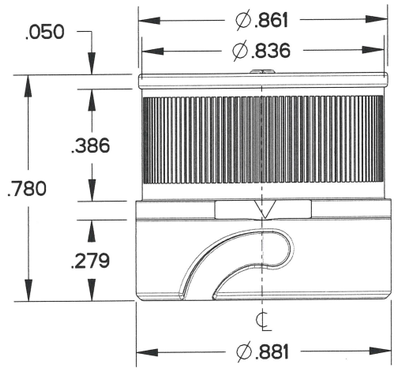

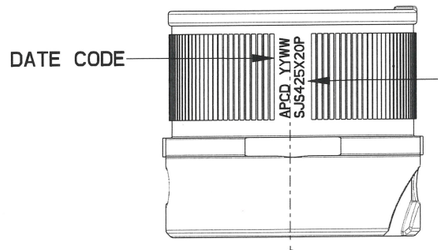

SJS425120P

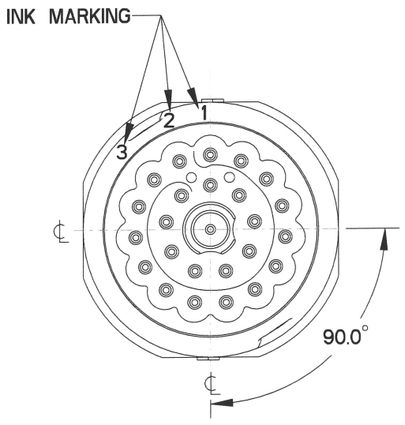

KEY A
SJS425120P

KEY B
SJS425220P

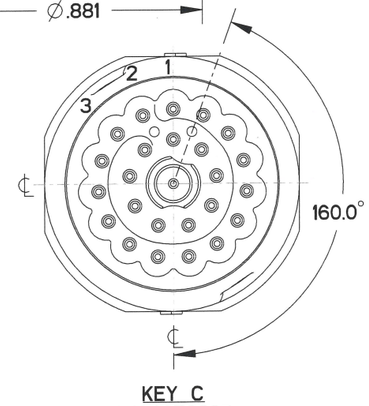

KEY C
SJS425320P

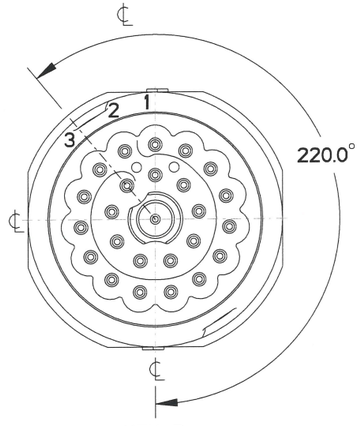

KEY D
SJS425420P

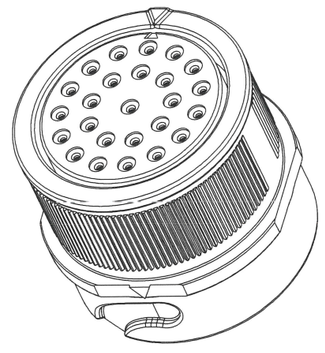

SJS425120P

NOTES:
1. MATERIALS:
   OUTER HOUSING: POLYETHERIMIDE
   INNER HOUSING: POLYETHERIMIDE, COLOR: SEE TABLE I
   CONTACT RETAINER: STAINLESS STEEL
   GROMMET: SILICONE RUBBER PER A-A-59588, COLOR: RED
   FACE SEAL: SILICONE RUBBER PER A-A-59588, COLOR: RED
2. FINISH:
   OUTER HOUSING: NICKEL, 200 MICROINCHES MINIMUM
   OVER COPPER, 120 MICROINCHES MINIMUM
3. PART ACCEPTS M39029/58-360 CRIMP PIN CONTACTS
4. MATES WITH CONNECTORS: SEE TABLE I
5. SUPPLIED WITH DUST CAP
6. EST. WEIGHT: 7.7g (LESS CONTACTS)
7. KEY C CONNECTORS WITH WHITE OR AMBER INNER HOUSINGS ARE CROSS-COMPATIBLE

FACE SEAL NOT SHOWN FOR CLARIFICATION

DIMENSIONS	TOLERANCES	PROJECTION
ANSI Y14.5M	.XX ±0.01	
UNITS: INCHES	.XXX ±0.005	
Pro/E FILE	ANGLES ±2.0°	

ORIGINAL

THIS DOCUMENT CONTAINS PROPRIETARY INFORMATION WHICH IS THE CONFIDENTIAL PROPERTY OF AMPHENOL PCD INC., BEVERLY, MA

Amphenol Pcd
CUSTOMER DRAWING

ENGR JAMES LIAO MAY-22-2026
CHKD 6/11/26
APPD 22 JUN 2026

TITLE
INLINE RECEPTACLE
SHELL SIZE 14 SJS PEGASUS
25 POSITION SIZE 22

SIZE	CUSTOMER DWG NO.	REV
B	SJS425120P	C

CODE: 58982 SCALE: 2:1 SHEET 1 OF 1