SJS425110

REV	ECN	APP'D
-	7760	JT 10/21/16
A	10353	MD 22 JUN 2026

MASTER COPY

TABLE I - PART NUMBER SCHEME						
APCD P/N LESS CONTACTS	APCD P/N WITH CONTACTS	PART MARKING	MATING INLINE RECEPTACLE	MATING PCB JAMNUT RECEPTACLE	KEY CONFIGURATION	INNER HOUSING COLOR
SJS425110	SJS425111	SJS425110	SJS425120	SJS425160	A	BLACK
SJS425210	SJS425211	SJS425210	SJS425220	SJS425260	B	GREEN
SJS425310	SJS425311	SJS425310	SJS425320	SJS425360	C	WHITE
SJS425410	SJS425411	SJS425410	SJS425420	SJS425460	D	YELLOW

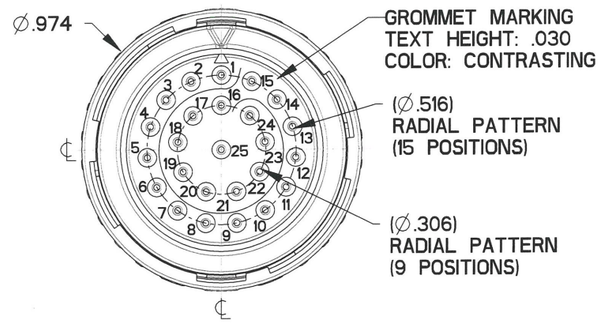

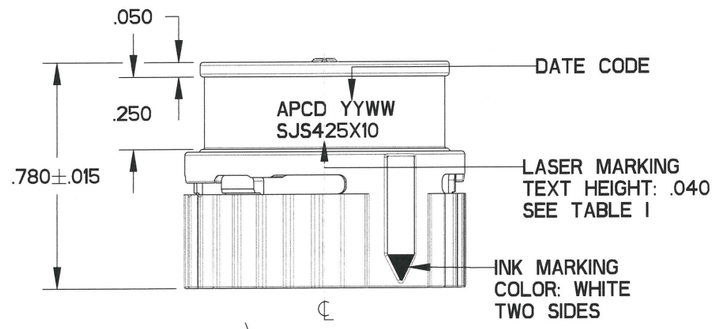

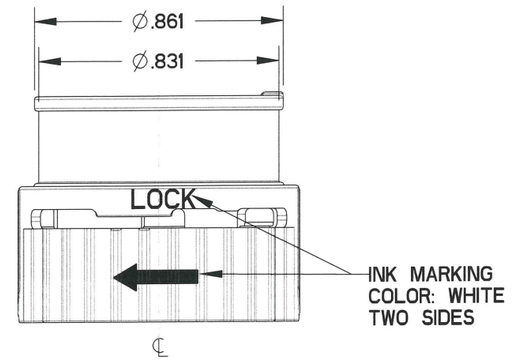

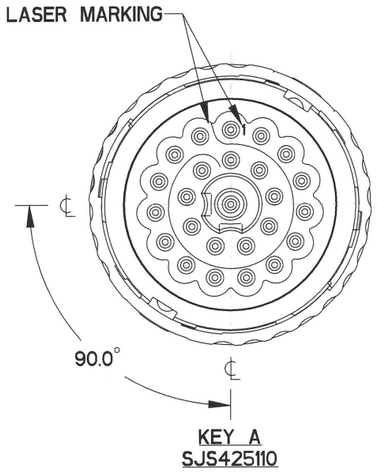

KEY A
SJS425110

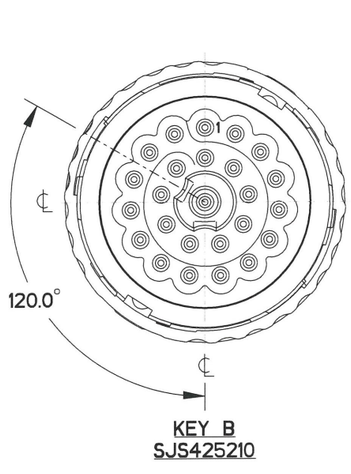

KEY B
SJS425210

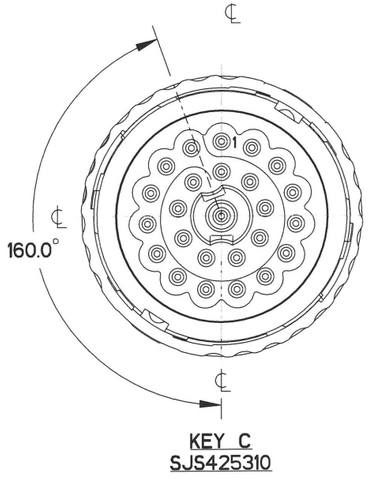

KEY C
SJS425310

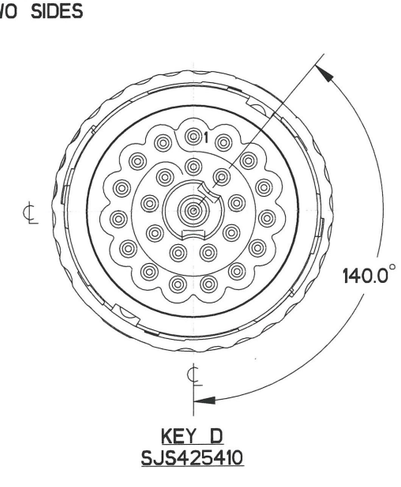

KEY D
SJS425410

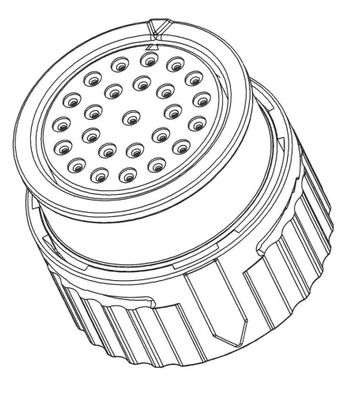

NOTES:
1. MATERIALS:
   OUTER HOUSING: POLYETHERIMIDE, COLOR: BLACK
   INNER HOUSING: POLYETHERIMIDE, COLOR: SEE TABLE I
   COUPLING NUT: PA6/6, COLOR: BLACK
   CONTACT RETAINER: STAINLESS STEEL
   GROMMET: SILICONE RUBBER PER A-A-59588, COLOR: RED
2. PART ACCEPTS M39029/57-354 CRIMP SOCKET CONTACTS
3. MATES WITH CONNECTORS: SEE TABLE I
4. EST. WEIGHT: 7.6g (LESS CONTACTS)
5. SUPPLIED WITH DUST CAP.

DIMENSIONS	TOLERANCES	PROJECTION
ANSI Y14.5M UNITS: INCHES Pro/E FILE	.XX ±0.01 .XXX ±0.005 ANGLES ±2.0°	

ORIGINAL

THIS DOCUMENT CONTAINS PROPRIETARY INFORMATION WHICH IS THE CONFIDENTIAL PROPERTY OF AMPHENOL PCD INC., BEVERLY, MA

Amphenol Pcd
CUSTOMER DRAWING

ENGR JAMES LIAO 05/22/2026
CHKD 6/11/26
APPD 22 JUN 2026

TITLE
INLINE PLUG
SHELL SIZE 14 SJS LUMINUS
25 POSITIONS SIZE 22

SIZE	CUSTOMER DWG NO.	REV
B	SJS425110	A

CODE: 58982 SCALE: 5:3 SHEET 1 OF 1

SJS425110
SJS425110