SJS320702

REV	ECN	APP'D
-	8572	



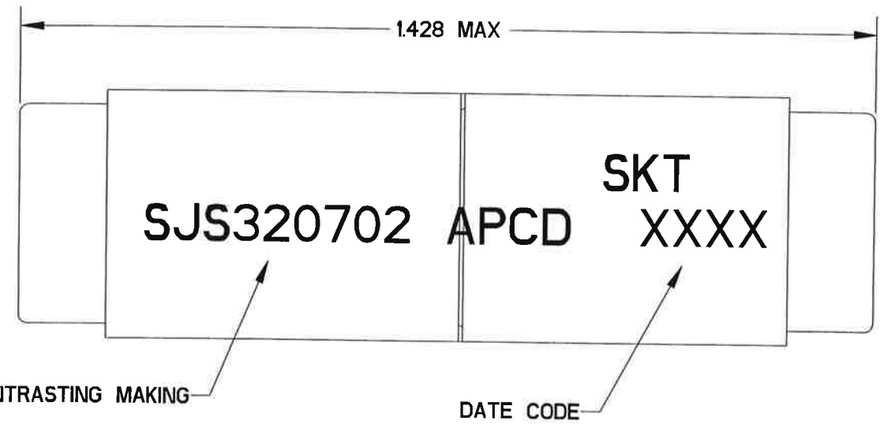

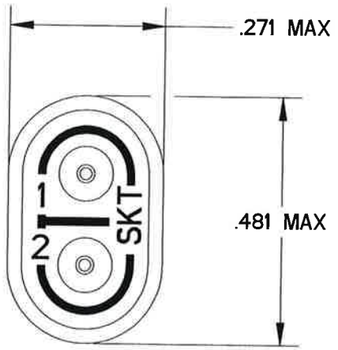

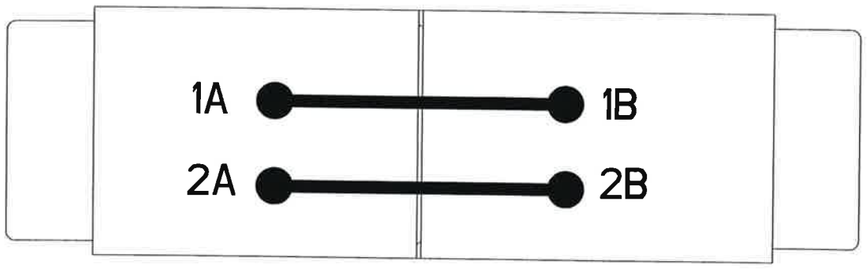

NOTES:
1. MATERIALS:
   MAIN HOUSING & INTERNAL HOUSING: POLYETHERIMIDE, BLACK
   CONTACT RETAINER: STAINLESS STEEL
   CONTACT: BRASS, GOLD PLATED PER MIL-DTL-45204, TYPE 1, GRADE C, CLASS 1.
   GROMMET: SILICONE RUBBER PER A-A-59588, COLOR: BROWN
2. PARTS ACCEPT SOCKET CONTACTS PER TABLE 1
3. DIELECTRIC WITHSTANDING VOLTAGE: 1500VRMS AT 60 HZ PER EIA-364-20
4. INSULATION RESISTANCE: 5000MΩ MINIMUM AT 500VDC PER EIA-364-21
5. CONTACT RESISTANCE:
   55mV MAX AT 7.5A WITH 20 AWG OR 45mV MAX AT 3A WITH 24 AWG PER EIA-364-06
6. EST. WEIGHT: 2.4 GRAMS

TABLE 1 - ORDERING OPTIONS

PART NUMBER	CONTACTS SUPPLIED	PLUGS SUPPLIED	PART MARKING
SJS320602	NONE	NONE	SJS320702
SJS320702	(5) M39029/22-192	(2) MS27488-20-2	

DIMENSIONS	TOLERANCES	PROJECTION
ANSI Y14.5M UNITS: INCHES Pro/E FILE	.XX ±0.01 .XXX ±0.005 ANGLES ±2.0°	

ORIGINAL

THIS DOCUMENT CONTAINS PROPRIETARY INFORMATION WHICH IS THE CONFIDENTIAL PROPERTY OF AMPHENOL PCD INC., BEVERLY, MA

Amphenol Pcd
CUSTOMER DRAWING

ENGR JUSTIN.PENG Apr-01-19

CHKD 4/15/19

APPD 15 April 2019

TITLE
SJS
DOUBLE UNBUSSED
SIZE 20

SIZE	CUSTOMER DWG NO.	REV
B	SJS320702	-

CODE: 58982 SCALE: 4:1 SHEET 1 OF 1

SJS320702
SJS320702