REV	ECN	APP'D
-	4679	JT 12/20/01
A	5793	RS 1/27/06
B	5971	

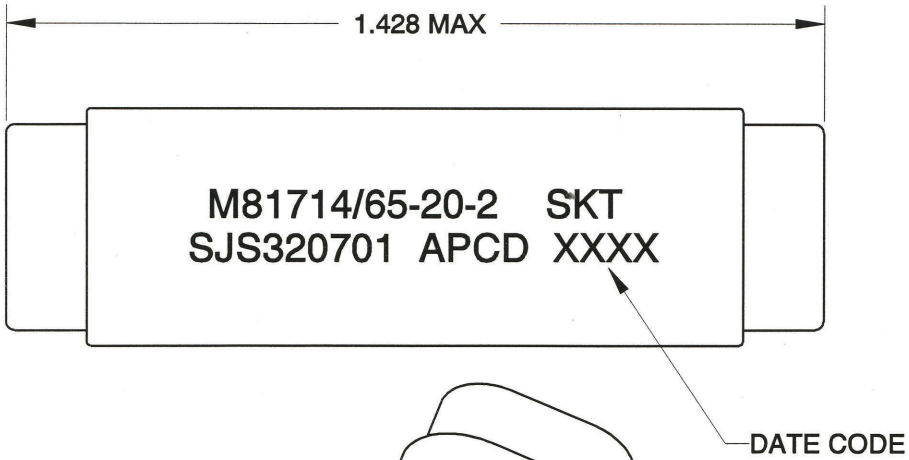

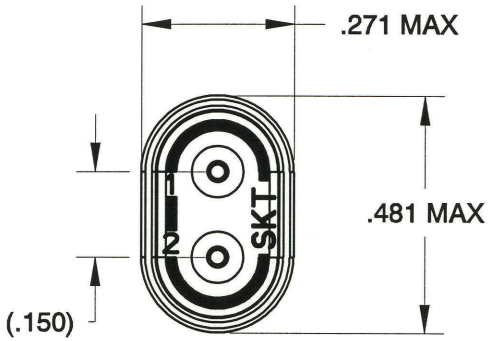

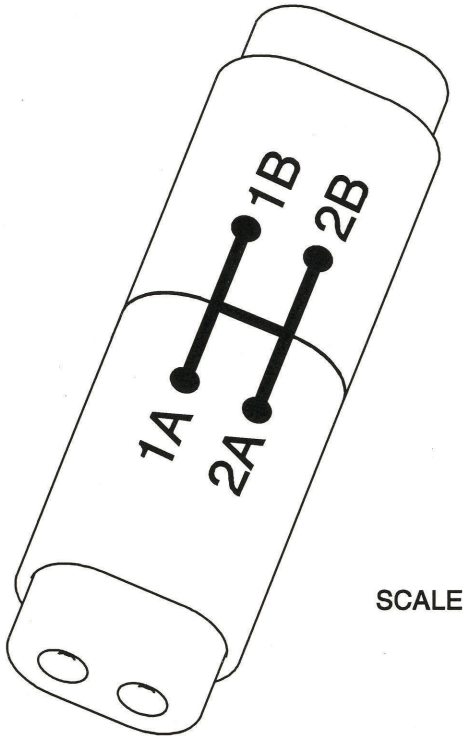

SCALE 3:1

NOTES:
1. MATERIALS:
   INSULATOR BODY: POLYETHERIMIDE PER ASTM-D-5205
   WIRE-SEALING GROMMET: SILICONE RUBBER PER A-A-59588
   INTERNAL CONTACT: COPPER ALLOY, GOLD FINISH
2. PART ACCEPTS M39029/22-192 SOCKET CONTACTS (5 SUPPLIED).
3. OPERATING RANGE:
   TEMPERATURE: -65° C TO 200° C
   INSULATION RESISTANCE: 5000 MEGOHMS MIN
   DIELECTRIC WITHSTANDING VOLTAGE: 1500 VRMS, SEA LEVEL
   200 VRMS, 100,000 FT ALTITUDE
   CURRENT RATING: 7.5 AMPS
   VIBRATION AND SHOCK: PER MIL-T-81714, PARA. 3.5.5 AND 3.5.8.

PART NO.	DESCRIPTION	P/N MARKING
SJS320601	CONTACTS NOT SUPPLIED	SJS320701
SJS320701	QTY 5, M39029/22-192 INCLUDED QTY 1, MS27488-20-1 SEALING PLUG INCLUDED	

DIMENSIONS	TOLERANCES	PROJECTION
ANSI Y14.5M UNITS: INCHES Pro/E FILE	.XX ±0.01 .XXX ±0.005 ANGLES ±1.0°	

Amphenol Pcd
SPECIFICATION DRAWING

ENGR S. HORNER 12/17/01

CHKD R. Ivarin 10/24/04

APPD [signature] 10/24/04

TITLE
SJS
WIRE SPLICE
DOUBLE BUSSED, SIZE 20

SIZE	DWG NO.	REV
A	SJS320701_C	B

CODE: 58982 | SCALE: 3:1 | SHEET 1 OF 1

THIS DOCUMENT CONTAINS PROPRIETARY INFORMATION WHICH IS THE CONFIDENTIAL PROPERTY OF AMPHENOL PCD INC., PEABODY, MA