SJS316702

REV	ECN	APP'D
-	8572	MD 15 Apr 2019



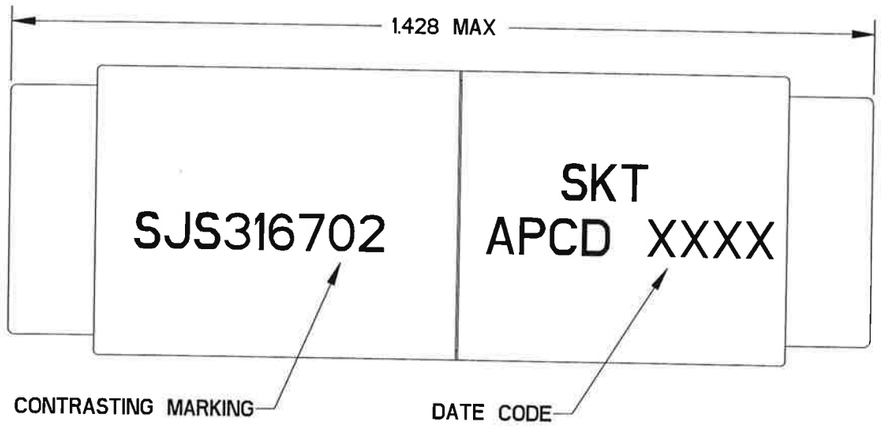

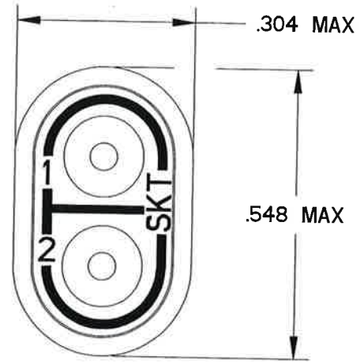

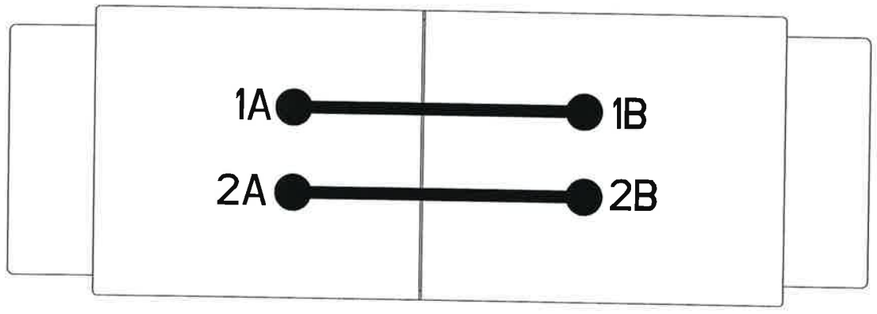

SJS316702

SJS316702

NOTES:
1. MATERIALS:
   MAIN HOUSING & INTERNAL HOUSING: POLYETHERIMIDE, BLACK
   CONTACT RETAINER: STAINLESS STEEL
   CONTACT: BRASS, GOLD PLATED PER MIL-DTL-45204, TYPE 1, GRADE C, CLASS 1.
   GROMMET: SILICONE RUBBER PER A-A-59588, COLOR: BROWN
2. PARTS ACCEPT SOCKET CONTACTS PER TABLE 1
3. DIELECTRIC WITHSTANDING VOLTAGE: 1500VRMS AT 60 HZ PER EIA-364-20
4. INSULATION RESISTANCE: 5000MΩ MINIMUM AT 500VDC PER EIA-364-21
5. CONTACT RESISTANCE:
   50mV MAX AT 13A WITH 16 AWG OR 45mV MAX AT 7.5A WITH 20 AWG PER EIA-364-06
6. EST. WEIGHT: 3.2 GRAMS

TABLE 1 - ORDERING OPTIONS

PART NUMBER	CONTACTS SUPPLIED	PLUGS SUPPLIED	PART MARKING
SJS316602	NONE	NONE	SJS316702
SJS316702	(5) M39029/22-193	(2) MS27488-16-2	

DIMENSIONS ANSI Y14.5M UNITS: INCHES Pro/E FILE	TOLERANCES .XX ±0.01 .XXX ±0.005 ANGLES ±2.0°	PROJECTION	Amphenol Pcd CUSTOMER DRAWING ENGR Justin.Peng Apr-01-19	TITLE SJS DOUBLE UNBUSSED SIZE 16
ORIGINAL	THIS DOCUMENT CONTAINS PROPRIETARY INFORMATION WHICH IS THE CONFIDENTIAL PROPERTY OF AMPHENOL PCD INC., BEVERLY, MA		CHKD 4/15/19 APPD 15 Apr 2019	SIZE B · CUSTOMER DWG NO. SJS316702 · REV -
				CODE: 58982 · SCALE: 4:1 · SHEET 1 OF 1

SJS316702