REV	ECN	APP'D
-	4679	JT 12/20/01
A	5793	RS 1/27/06
B	5971	JT 10/20/06
C	10343	1/14/26

MASTER COPY

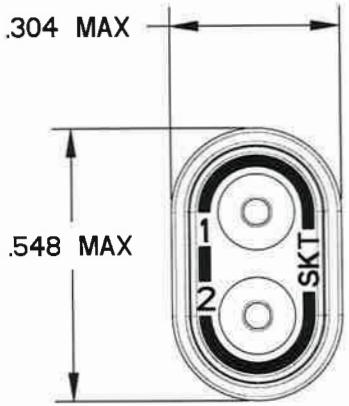

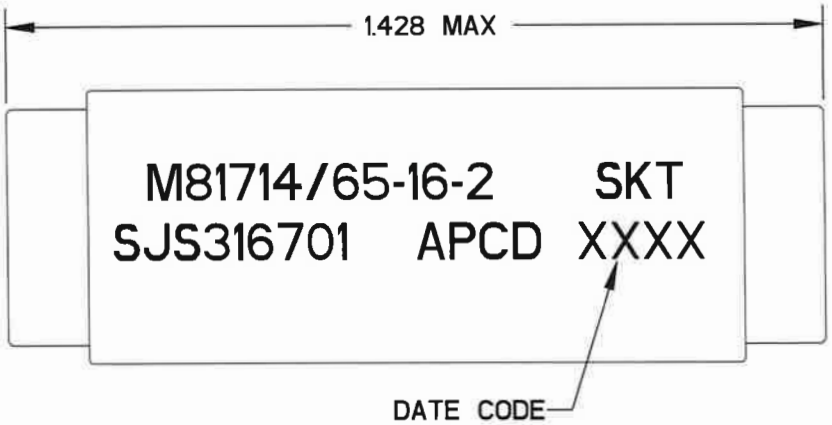

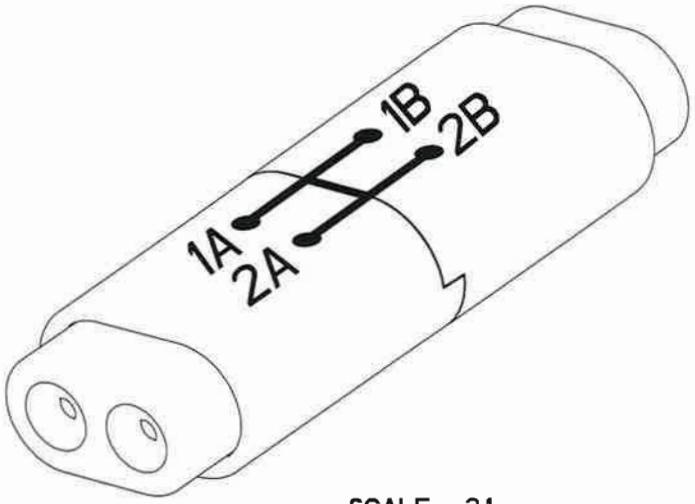

SCALE 3:1

NOTES:

1. MATERIALS:
   INSULATOR BODY: POLYETHERIMIDE PER ASTM-5205
   WIRE-SEALING GROMMET: SILICONE RUBBER PER A-A-59588
   INTERNAL CONTACT: COPPER ALLOY, GOLD FINISH
2. PART ACCEPTS M39029/22-193 SOCKET CONTACTS - PER TABLE
3. OPERATING RANGE:
   TEMPERATURE: -65°C TO 200°C
   INSULATION RESISTANCE: 5000 MEGOHMS MIN
   DIELECTRIC WITHSTANDING VOLTAGE: 1500 VRMS, SEA LEVEL
   200 VRMS, 100,000 FT ALTITUDE
   CURRENT RATING: 13 AMPS
   VIBRATION AND SHOCK: PER SAE-AS81714, PARA. 3.5.5 AND 3.5.8.

PART NO.	DESCRIPTION	P/N MARKING
SJS316601	CONTACTS NOT SUPPLIED	SJS316701
SJS316701	QTY 5, M39029/22-193 INCLUDED QTY 1, MS27488-16-1 SEALING PLUG INCLUDED	

DIMENSIONS	TOLERANCES	PROJECTION
ANSI Y14.5M	.XX ±0.01	
UNITS: INCHES	.XXX ±0.005	
Pro/E FILE	ANGLES ±1.0°	

Amphenol Pcd
CUSTOMER DRAWING

ENGR S. HORNER 12/17/01

CHKD 1/13/26

APPD 1/14/26

TITLE
SJS
WIRE SPLICE, DOUBLE
BUSSED, SIZE 16

ORIGINAL

THIS DOCUMENT CONTAINS PROPRIETARY INFORMATION WHICH IS THE CONFIDENTIAL PROPERTY OF AMPHENOL PCD BEVERLY, MA, USA

SIZE	CUSTOMER DWG NO.	REV
A	SJS316701_C	C

CODE: 58982 SCALE: 3:1 SHEET 1 OF 1