SJS257100

REV	ECN	APP'D
-	7374	JT 10/4/14
A	9789	MD 15 MAY 2023

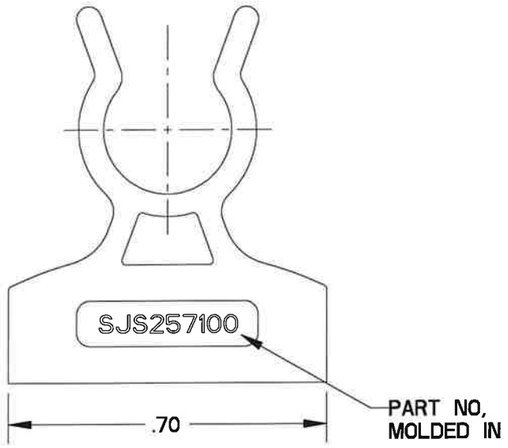

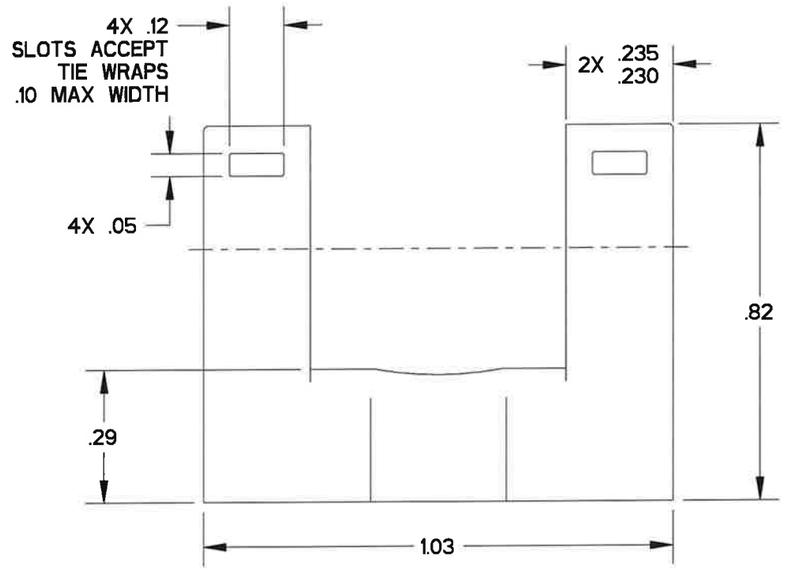

MASTER COPY

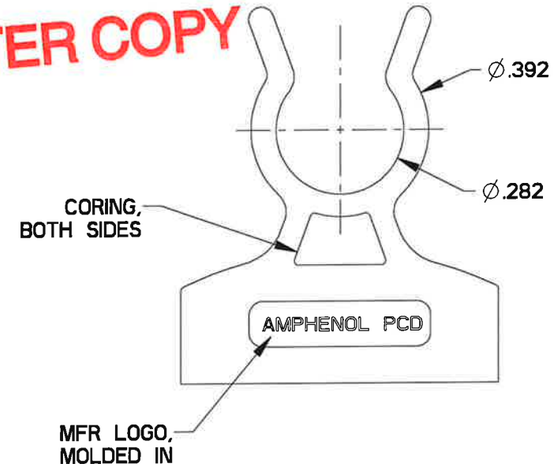

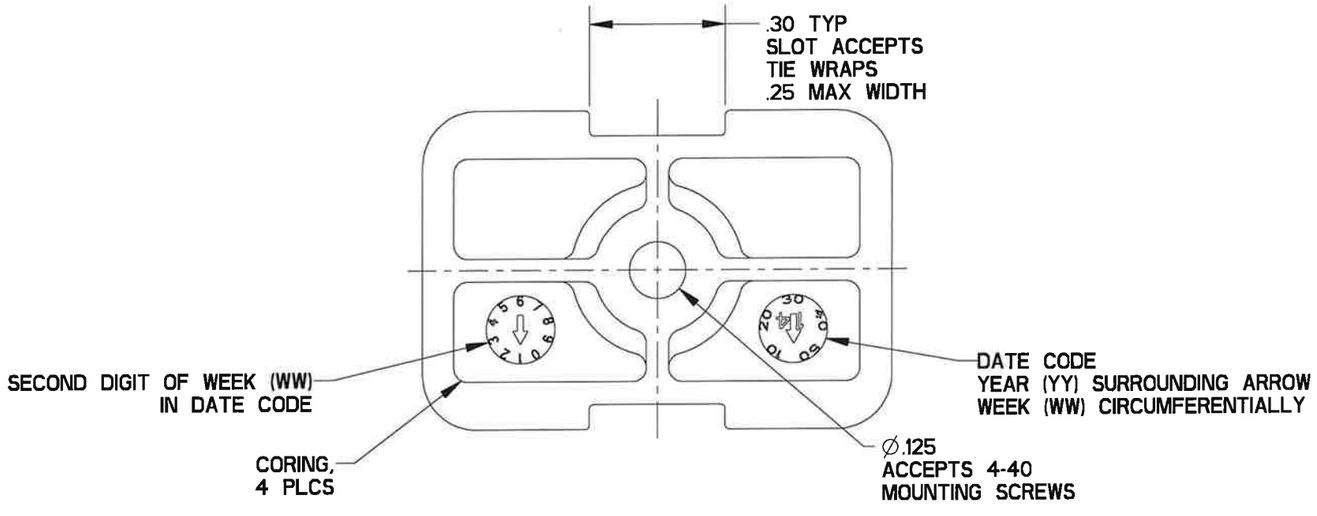

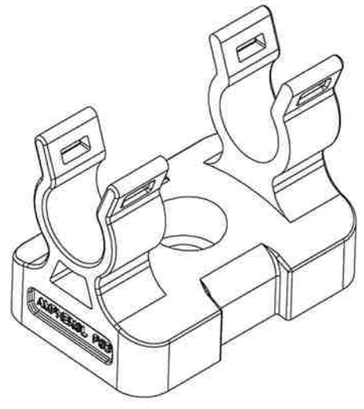

SCALE 2:1

NOTES:
1. MATERIAL: NYLON PA66 COLOR: BLACK.
2. ACCEPTS & RETAINS LUMINUS SHELL SIZE 5 IN-LINE MATED PAIRS
3. EST. WEIGHT: 2.8g

DIMENSIONS	TOLERANCES	PROJECTION
ANSI Y14.5M UNITS: INCHES Pro/E FILE	.XX ±0.01 .XXX ±0.005 ANGLES ±2.0°	

ORIGINAL

THIS DOCUMENT CONTAINS PROPRIETARY INFORMATION WHICH IS THE CONFIDENTIAL PROPERTY OF AMPHENOL PCD INC. BEVERLY, MA, USA

Amphenol Pcd
CUSTOMER DRAWING

ENGR M. DiGIACOMO 23 JUNE 2014

CHKD 5/15/23

APPD 15 MAY 2023

TITLE
MOUNTING CRADLE
SJS SHELL SIZE 5
4-40 SCREW MOUNT

SIZE	CUSTOMER DWG NO.	REV
B	SJS257100	A

CODE: 58982 SHEET 1 OF 1

SJS257100
SJS257100