SJS257000

REV	ECN	APP'D
-	7230	JT 1/20/14
A	7843	JT 10/11/16

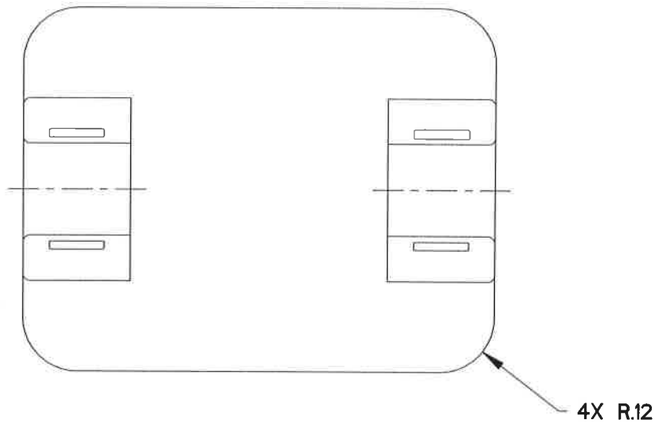

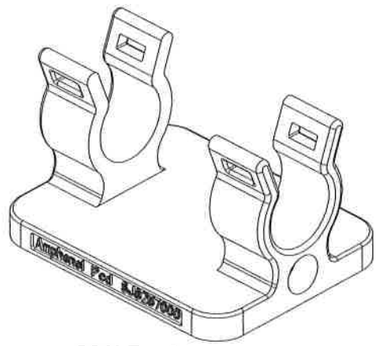

SCALE 2:1

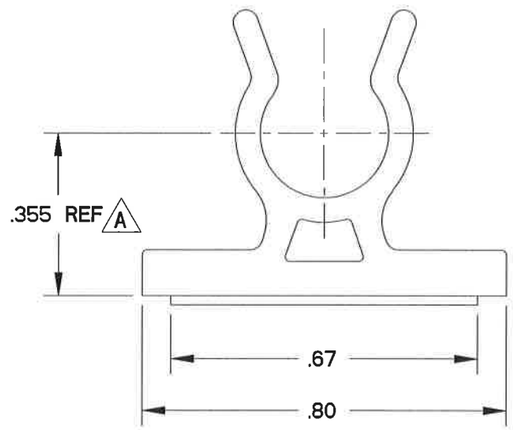

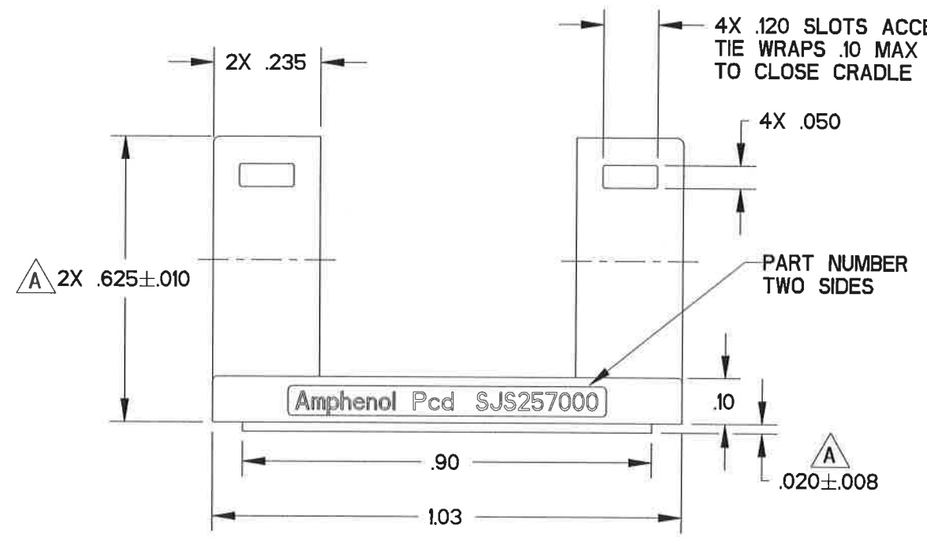

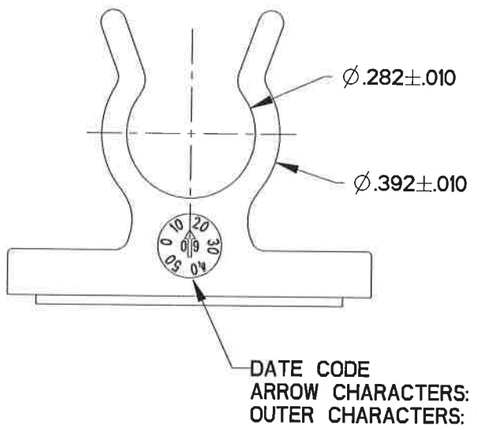

NOTES:
1. MATERIALS:
   MOUNTING CRADLE: PA6/6
   ADHESIVE TAPE: 3M 5958FR VHB
2. EST. WEIGHT: 2.7 GRAMS
3. FOR USE WITH SJS SHELL SIZE 5 INLINE MATED PAIRS

DIMENSIONS ANSI Y14.5M UNITS: INCHES Pro/E FILE	TOLERANCES .XX ±0.01 .XXX ±0.005 ANGLES ±2.0°	PROJECTION	Amphenol Pcd SPECIFICATION DRAWING ENGR A. Hien 13-Jul-10	TITLE MOUNTING CRADLE, ADHESIVE TAPE SJS SHELL SIZE 5
ORIGINAL	THIS DOCUMENT CONTAINS PROPRIETARY INFORMATION WHICH IS THE CONFIDENTIAL PROPERTY OF AMPHENOL PCD INC. BEVERLY, MA, USA		CHKD 10/11/16 APPD 10/11/16	SIZE B · DWG NO. SJS257000 · REV A CODE: 58982 · SCALE: 3:1 · SHEET 1 OF 1

SJS257000

SJS883000