REV	ECN	APP'D
-	7976	WL 3/30/17

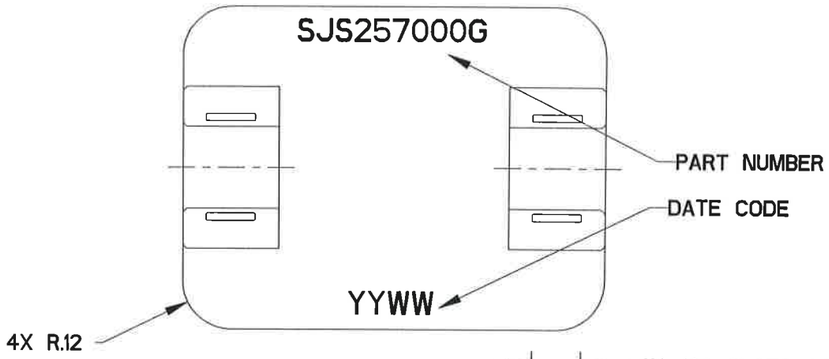

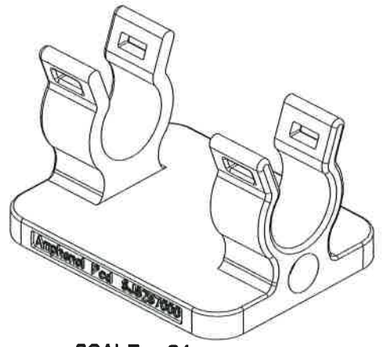

SCALE 2:1

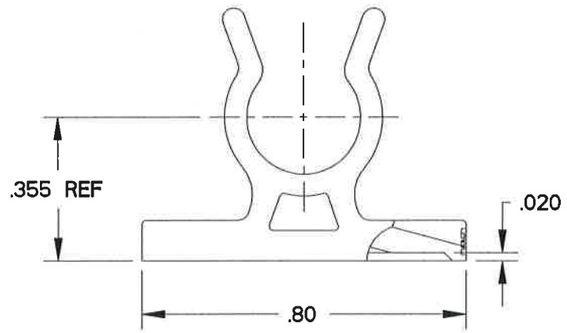

SECTION A-A

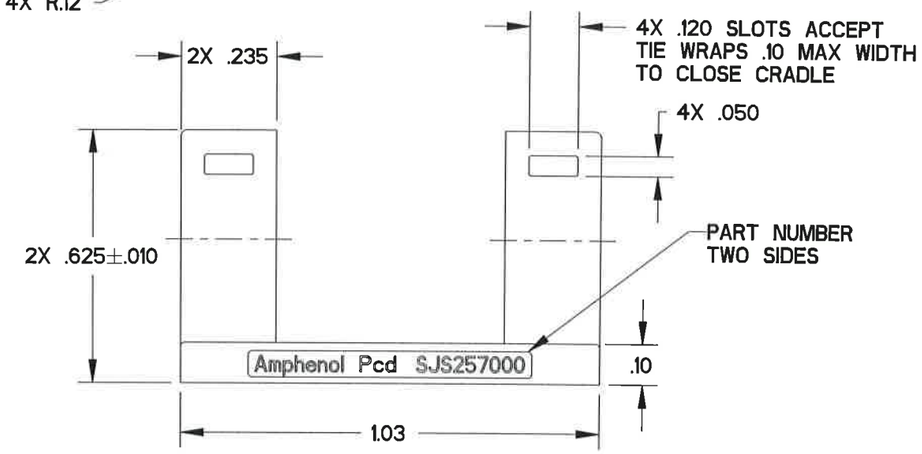

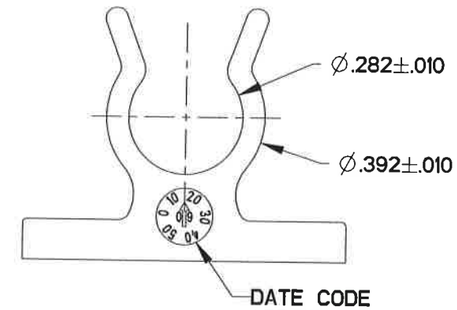

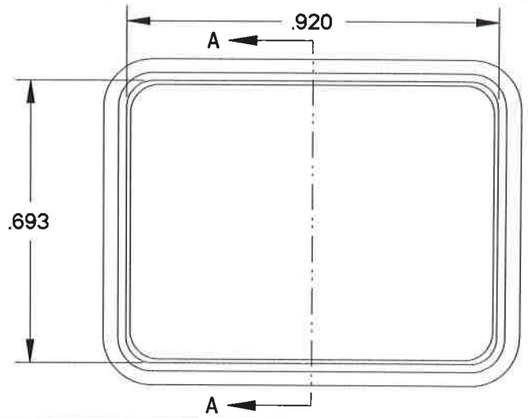

NOTES:
1. MATERIALS:
   MOUNTING CRADLE: PA6/6
2. EST. WEIGHT: 2.4 GRAMS
3. FOR USE WITH SJS SHELL SIZE 5 INLINE MATED PAIRS

DIMENSIONS	TOLERANCES	PROJECTION
ANSI Y14.5M UNITS: INCHES Pro/E FILE	.XX ±0.01 .XXX ±0.005 ANGLES ±2.0°	

ORIGINAL

THIS DOCUMENT CONTAINS PROPRIETARY INFORMATION WHICH IS THE CONFIDENTIAL PROPERTY OF AMPHENOL PCD INC. BEVERLY, MA, USA

Amphenol Pcd
SPECIFICATION DRAWING

ENGR: M. DiGIACOMO 16 MAR 2017

CHKD: 3/30/17

APPD: 3/30/17

TITLE: MOUNTING CRADLE
EPOXY APPLICATION
SJS SHELL SIZE 5

SIZE	DWG NO.	REV
B	SJS257000G	-

CODE: 58982 | SCALE: 8:3 | SHEET 1 OF 1

SJS257000G
SJS257000G