SJS225160M

TABLE I - PART NUMBER SCHEME						
APCD P/N LESS CONTACTS	APCD P/N WITH CRIMP CONTACTS	APCD P/N WITH PC TAIL CONTACTS	PART MARKING	MATING INLINE PLUG	KEY	INNER HOUSING COLOR
SJS225160M	SJS225161M	SJS225162M	SJS225160M	SJS225110M	A	BLACK
SJS225260M	SJS225261M	SJS225262M	SJS225260M	SJS225210M	B	GREEN
SJS225360M	SJS225361M	SJS225362M	SJS225360M	SJS225310M	C	WHITE
SJS225460M	SJS225461M	SJS225462M	SJS225460M	SJS225410M	D	YELLOW

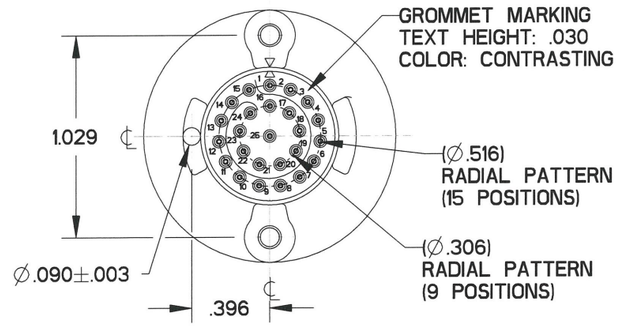

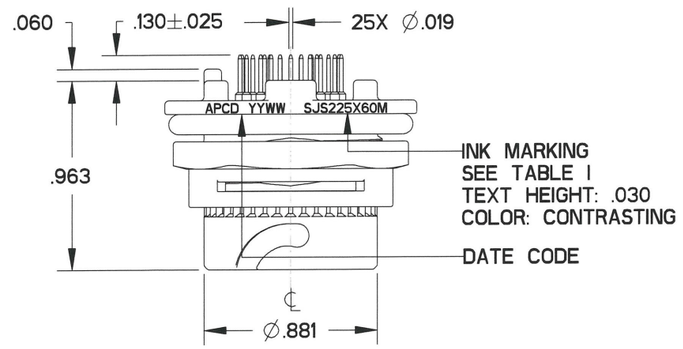

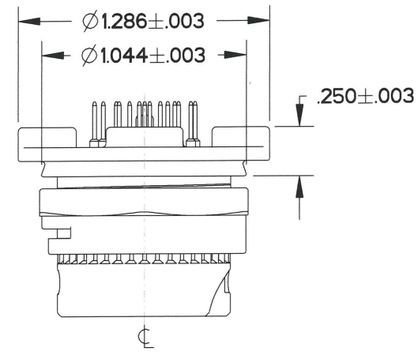

O-RING NOT SHOWN FOR VERTICAL MOUNTING DIMENSION CLARIFICATION

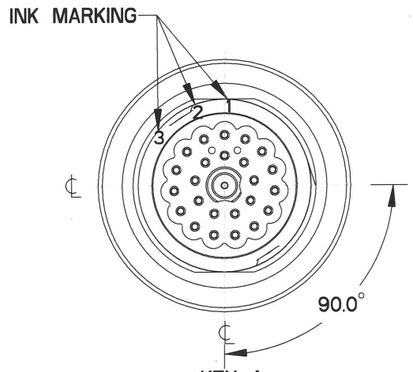

KEY A
SJS225160M

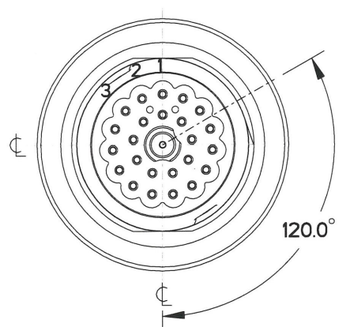

KEY B
SJS225260M

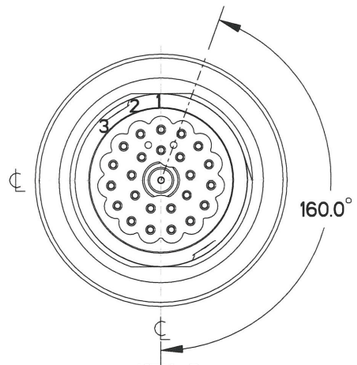

KEY C
SJS225360M

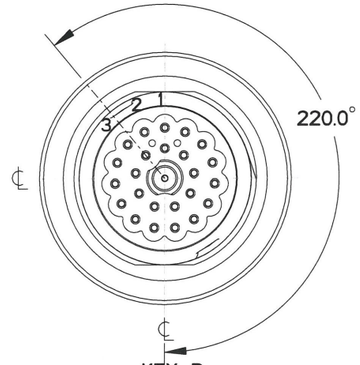

KEY D
SJS225460M

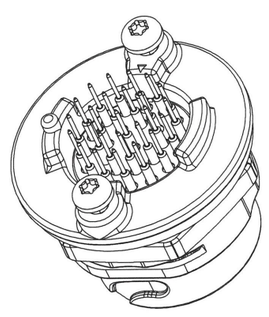

JAM NUT & FACE SEAL NOT SHOWN FOR CLARIFICATION

NOTES:
1. MATERIALS:
   OUTER HOUSING: POLYETHERIMIDE
   INNER HOUSING: POLYETHERIMIDE, COLOR: SEE TABLE I
   JAM NUT: PA6/6, COLOR: BLACK
   CONTACT RETAINER: STAINLESS STEEL
   O-RING: NICKEL-CARBON FILLED SILICONE RUBBER
   GROMMET: SILICONE RUBBER PER A-A-59588, COLOR: RED
   FACE SEAL: SILICONE RUBBER PER A-A-59588, COLOR: RED
2. FINISH:
   OUTER HOUSING: NICKEL, 200 MICROINCHES MINIMUM
   OVER COPPER, 120 MICROINCHES MINIMUM
3. PART ACCEPTS M39029/58-360 CRIMP PIN CONTACTS (-61M), OR PC TAIL CONTACTS APCD PART NO. CNP831033 AS SHOWN (-62M)
4. MATING CONNECTORS: SEE TABLE I
5. SUPPLIED WITH DUST CAP
6. EST. WEIGHT: 14g (LESS CONTACTS); 18g (WITH PC TAIL CONTACTS)
7. KEY C CONNECTORS WITH WHITE OR AMBER INNER HOUSINGS ARE CROSS-COMPATIBLE

DIMENSIONS	TOLERANCES	PROJECTION
ANSI Y14.5M	.XX ±0.01	
UNITS: INCHES	.XXX ±0.005	
Pro/E FILE	ANGLES ±2.0°	

ORIGINAL

THIS DOCUMENT CONTAINS PROPRIETARY INFORMATION WHICH IS THE CONFIDENTIAL PROPERTY OF AMPHENOL PCD INC., BEVERLY, MA

Amphenol Pcd
CUSTOMER DRAWING

ENGR Roman Ton 05/26/2026
CHKD 6/11/26
APPD 23 JUN 2026

TITLE
PCB JAMNUT RECEPTACLE
SHELL SIZE 14 SJS PEGASUS
25 POSITION SIZE 22

SIZE	CUSTOMER DWG NO.	REV
B	SJS225160M	D

CODE: 58982 | SCALE: 2:1 | SHEET 1 OF 2

MASTER COPY

REV	ECN	APP'D
-	7463	JT 4/15/15
A	7522	JT 5/15/15
B	7859	JT 12/2/16
C	8857	MD 1/24/20
D	10353	MD 26 JUN 2026

SJS225160M
SJS225160M

MASTER COPY

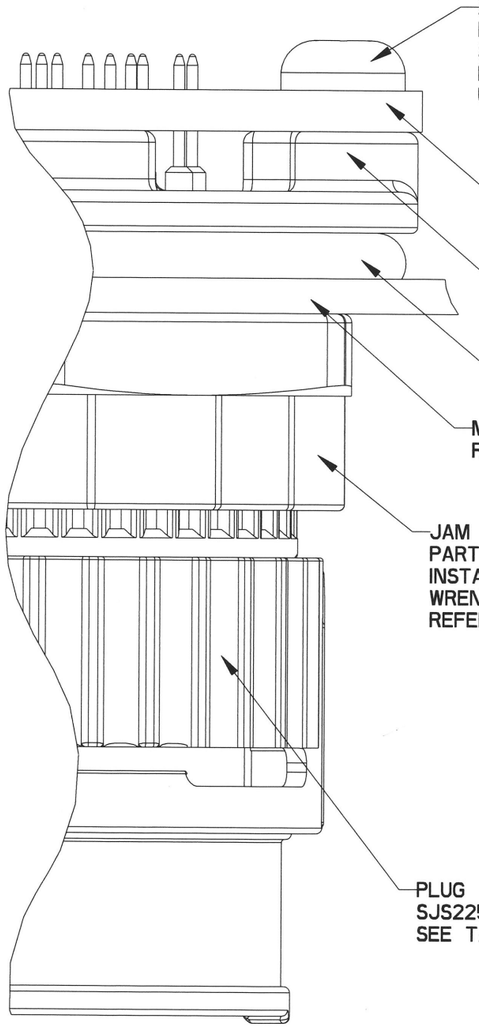

MOUNTING INSTRUCTIONS
SCALE 4:1

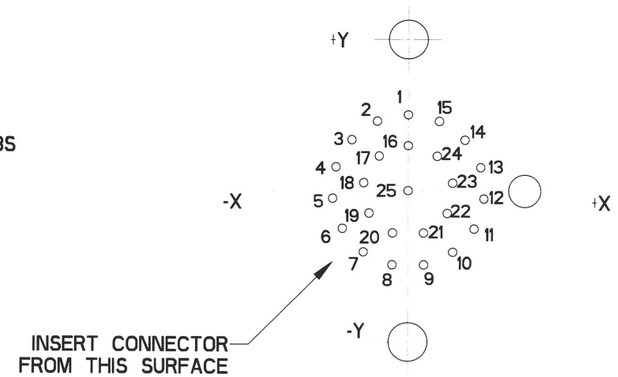

PIN LOCATION
ON PCB

CONTACT HOLE LOCATIONS		
CONTACT NUMBER	LOCATION	
	X AXIS	Y AXIS
1	.000	+.258
2	-.105	+.236
3	-.192	+.173
4	-.245	+.080
5	-.257	-.027
6	-.223	-.129
7	-.152	-.209
8	-.054	-.252
9	+.054	-.252
10	+.152	-.209
11	+.223	-.129
12	+.257	-.027
13	+.245	+.080
14	+.192	+.173
15	+.105	+.236
16	.000	+.153
17	-.098	+.117
18	-.151	+.027
19	-.133	-.077
20	-.052	-.144
21	+.052	-.144
22	+.133	-.077
23	+.151	+.027
24	+.098	+.117
25	.000	.000

PCB ARRANGEMENT
RECOMMENDED DIMENSIONAL TOLERANCE
.XXX ±.002

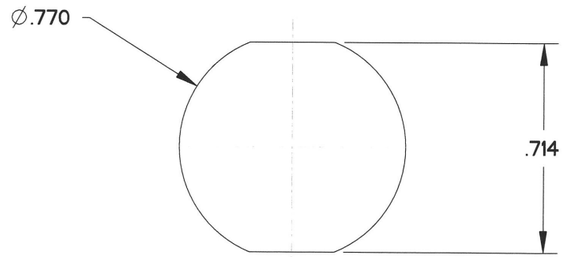

MOUNTING PANEL CUT OUT

SIZE	CUSTOMER DWG NO.	REV
B	SJS225160M	D
CODE: 58982	SCALE: 2:1	SHEET 2 OF 2

SJS225160M

SJS225160M