SJS225120M

TABLE I - PART NUMBER SCHEME					
APCD P/N LESS CONTACTS	APCD P/N WITH CRIMP CONTACTS	PART MARKING	MATING INLINE PLUG	KEY	INNER HOUSING COLOR
SJS225120M	SJS225121M	SJS225120M	SJS225110M	A	BLACK
SJS225220M	SJS225221M	SJS225220M	SJS225210M	B	GREEN
SJS225320M	SJS225321M	SJS225320M	SJS225310M	C	WHITE
SJS225420M	SJS225421M	SJS225420M	SJS225410M	D	YELLOW

REV	ECN	APP'D
-	7463	JT 4/15/15
A	7522	JT 5/15/15
B	7859	JT 12/2/16
C	10353	MD 22 JUN 2026

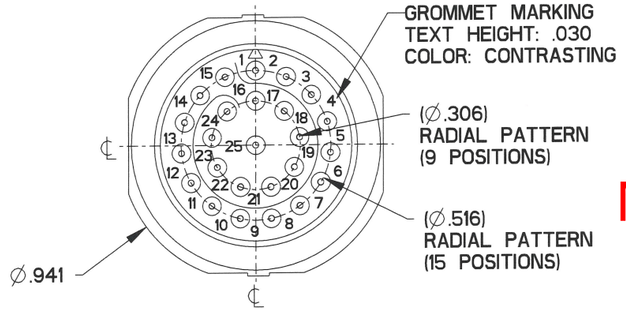

MASTER COPY

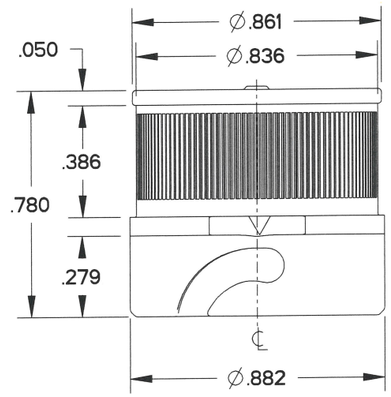

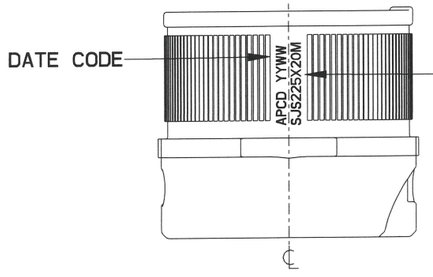

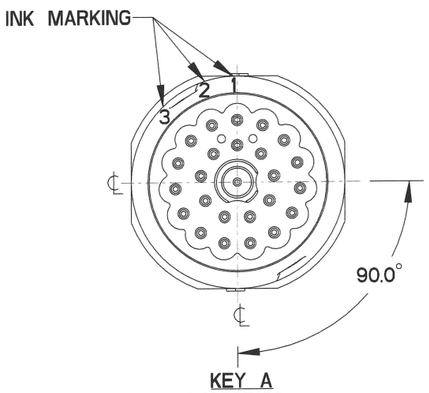

KEY A
SJS225120M

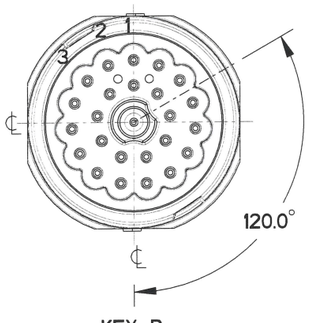

KEY B
SJS225220M

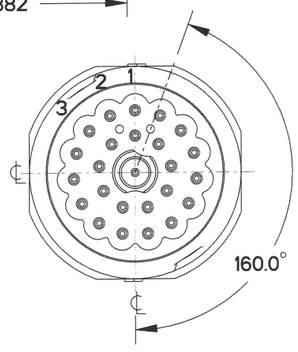

KEY C
SJS225320M

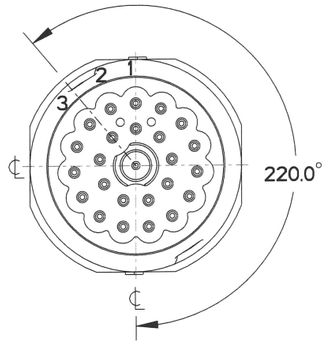

KEY D
SJS225420M

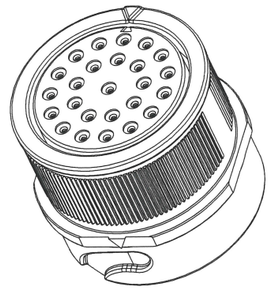

NOTES:
1. MATERIALS:
   OUTER HOUSING: POLYETHERIMIDE
   INNER HOUSING: POLYETHERIMIDE, COLOR: SEE TABLE I
   CONTACT RETAINER: STAINLESS STEEL
   GROMMET: SILICONE RUBBER PER A-A-59588, COLOR: RED
   FACE SEAL: SILICONE RUBBER PER A-A-59588, COLOR: RED
2. FINISH:
   OUTER HOUSING: NICKEL, 200 MICROINCHES MINIMUM
   OVER COPPER, 120 MICROINCHES MINIMUM
3. PART ACCEPTS M39029/58-360 CRIMP PIN CONTACTS
4. MATING CONNECTORS: SEE TABLE I
5. SUPPLIED WITH DUST CAP
6. EST. WEIGHT: 7.7g (LESS CONTACTS)
7. KEY C CONNECTORS WITH WHITE OR AMBER INNER HOUSINGS ARE CROSS-COMPATIBLE

FACE SEAL NOT SHOWN FOR CLARIFICATION

DIMENSIONS	TOLERANCES	PROJECTION
ANSI Y14.5M	.XX ±0.01	
UNITS: INCHES	.XXX ±0.005	
Pro/E FILE	ANGLES ±2.0°	

ORIGINAL

THIS DOCUMENT CONTAINS PROPRIETARY INFORMATION WHICH IS THE CONFIDENTIAL PROPERTY OF AMPHENOL PCD INC., BEVERLY, MA

Amphenol Pcd
CUSTOMER DRAWING

ENGR ROMAN TON 05/22/2026
CHKD 6/11/26
APPD 22 JUN 2026

TITLE
INLINE RECEPTACLE
SHELL SIZE 14 SJS PEGASUS
25 POSITION SIZE 22

SIZE	CUSTOMER DWG NO.	REV
B	SJS225120M	C

CODE: 58982 SCALE: 5:3 SHEET 1 OF 1

SJS225120M
SJS225120M