REV	ECN	APP'D
-	7507	

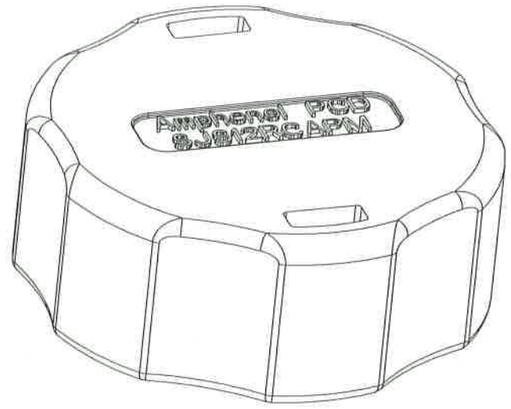

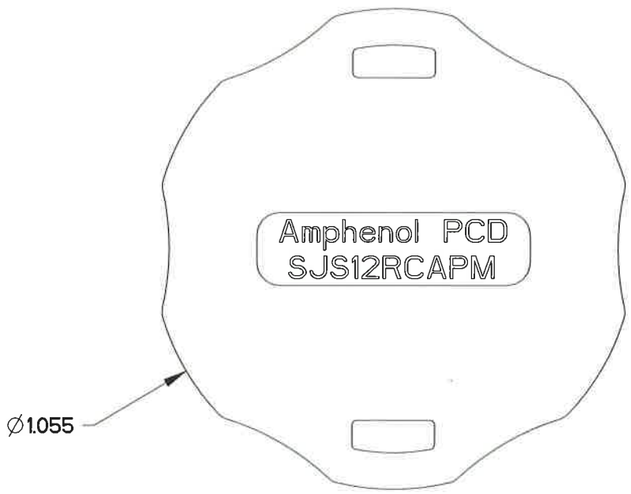

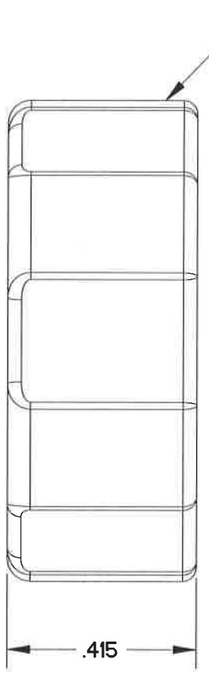

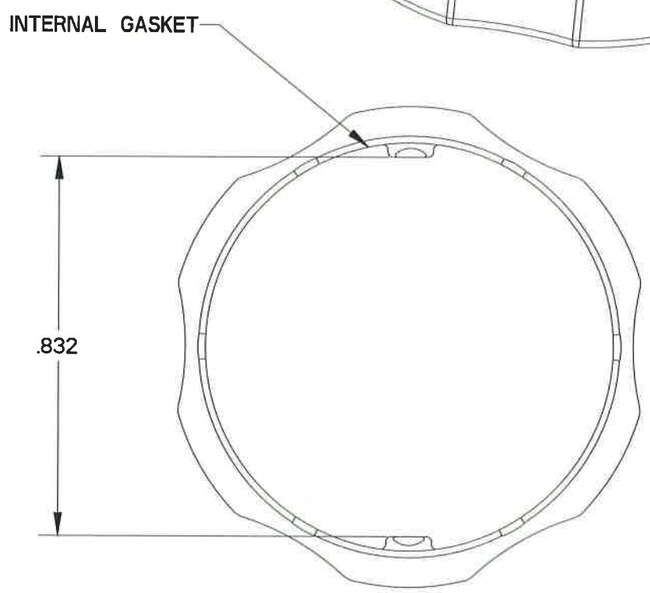

NOTES:
1. MATERIALS:
   CAP HOUSING: POLYETHERIMIDE
   INTERNAL GASKET: NICKEL-CARBON FILLED SILICONE RUBBER
2. FINISH:
   CAP HOUSING: NICKEL, 200 MICROINCHES MINIMUM
   OVER COPPER, 120 MICROINCHES MINIMUM
3. PARTS MATE WITH SJS225120M/220M/320M/420M
   SJS425120P/220P/320P/420P INLINE RECEPTACLES &
   SJS225160M/260M/360M/460M &
   SJS425160P/260P/360P/460P JAM NUT/PCB RECEPTACLES

DIMENSIONS	TOLERANCES	PROJECTION
ANSI Y14.5M	.XX ±0.01	
UNITS: INCHES	.XXX ±0.005	
Pro/E FILE	ANGLES ±2.0°	

ORIGINAL

THIS DOCUMENT CONTAINS PROPRIETARY INFORMATION WHICH IS THE CONFIDENTIAL PROPERTY OF AMPHENOL PCD INC., BEVERLY, MA

Amphenol Pcd
SPECIFICATION DRAWING

ENGR ANDREW.WANG Apr-23-15
CHKD 4/23/15
APPD 4/25/15

TITLE
END CAP FOR SJS
SHELL SIZE 14 RECEPTACLE

SIZE	DWG NO.	REV
B	SJS12RCAPM_CE	-

CODE: 58982 | SCALE: 3:1 | SHEET 1 OF 1

SJS12RCAPM_CE