SJS112160P

TABLE I - PART NUMBER SCHEME						
APCD P/N LESS CONTACTS	APCD P/N WITH CRIMP CONTACTS	APCD P/N WITH PC TAIL CONTACTS	PART MARKING	MATING INLINE PLUG	KEY	INNER HOUSING COLOR
SJS112160P	SJS112161P	SJS112162P	SJS112160P	SJS112110P	A	BLACK
SJS112260P	SJS112261P	SJS112262P	SJS112260P	SJS112210P	B	GREEN
SJS112360P	SJS112361P	SJS112362P	SJS112360P	SJS112310P	C	WHITE
SJS112460P	SJS112461P	SJS112462P	SJS112460P	SJS112410P	D	YELLOW

REV	ECN	APP'D
-	7463	JT 4/15/15
A	7522	JT 5/15/15
B	7859	JT 12/2/16
C	8857	MD 2/18/20
D	10353	MD 24 JUN 2026

MASTER COPY

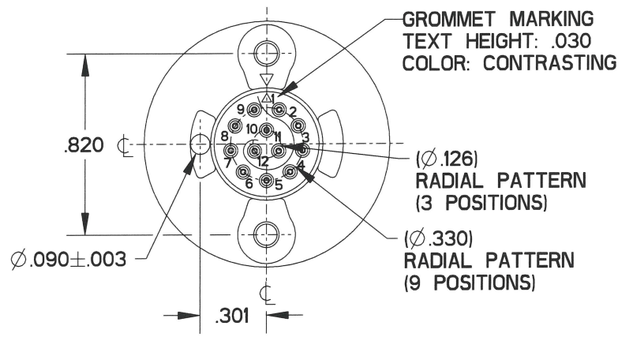

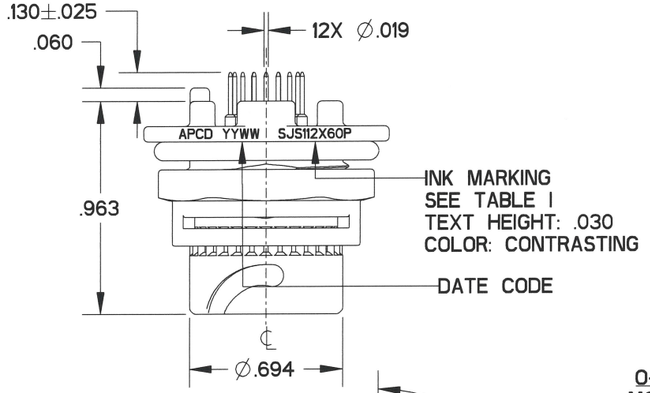

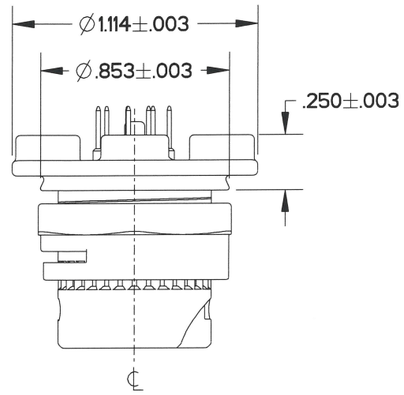

O-RING NOT SHOWN FOR VERTICAL MOUNTING DIMENSION CLARIFICATION

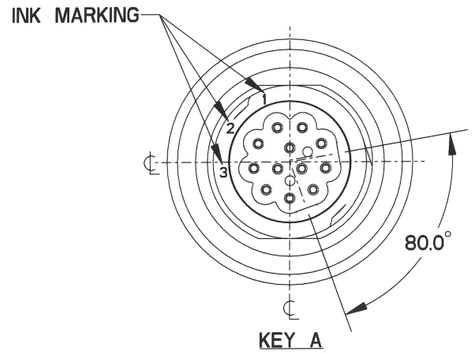

KEY A
SJS112160P

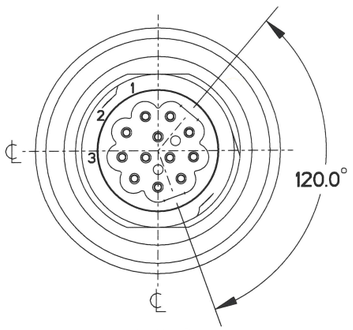

KEY B
SJS112260P

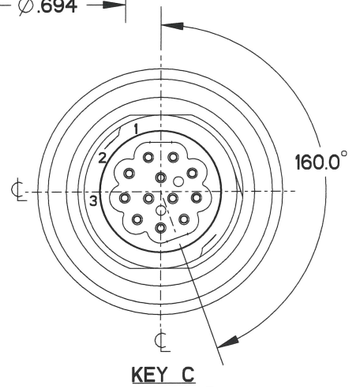

KEY C
SJS112360P

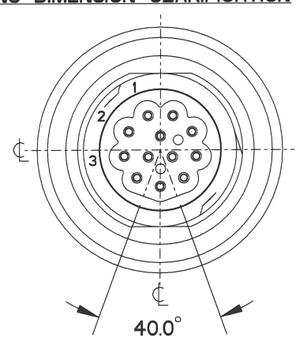

KEY D
SJS112460P

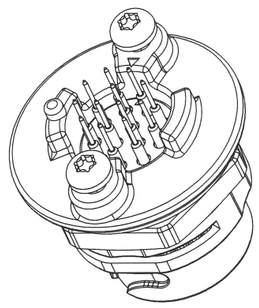

JAM NUT & FACE SEAL NOT SHOWN FOR CLARIFICATION

NOTES:
1. MATERIALS:
   OUTER HOUSING: POLYETHERIMIDE
   INNER HOUSING: POLYETHERIMIDE, COLOR: SEE TABLE I
   JAM NUT: PA6/6, COLOR: BLACK
   CONTACT RETAINER: STAINLESS STEEL
   O-RING: NICKEL-CARBON FILLED SILICONE RUBBER
   GROMMET: SILICONE RUBBER PER A-A-59588, COLOR: RED
   FACE SEAL: SILICONE RUBBER PER A-A-59588, COLOR: RED
2. FINISH:
   OUTER HOUSING: NICKEL, 200 MICROINCHES MINIMUM
   OVER COPPER, 120 MICROINCHES MINIMUM
3. PART ACCEPTS M39029/58-360 CRIMP PIN CONTACTS (-61P),
   OR PC TAIL CONTACTS APCD PART NO. CNP831033 AS SHOWN (-62P)
4. MATING CONNECTORS: SEE TABLE I
5. SUPPLIED WITH DUST CAP
6. EST. WEIGHT: 10g (LESS CONTACTS); 12g (WITH PC TAIL CONTACTS)
7. KEY C CONNECTORS WITH WHITE OR AMBER INNER HOUSINGS ARE CROSS-COMPATIBLE

DIMENSIONS	TOLERANCES	PROJECTION
ANSI Y14.5M	.XX ±0.01	
UNITS: INCHES	.XXX ±0.005	
Pro/E FILE	ANGLES ±2.0°	

ORIGINAL

THIS DOCUMENT CONTAINS PROPRIETARY INFORMATION WHICH IS THE CONFIDENTIAL PROPERTY OF AMPHENOL PCD INC., BEVERLY, MA

Amphenol Pcd
CUSTOMER DRAWING

ENGR ROMAN TON 06/03/2026
CHKD 6/11/26
APPD 24 JUN 2026

TITLE
PCB JAMNUT RECEPTACLE
SHELL SIZE 11 SJS PEGASUS
12 POSITION SIZE 22

SIZE	CUSTOMER DWG NO.	REV
B	SJS112160P	D

CODE: 58982 SCALE: 3:2 SHEET 1 OF 2

SJS112160P
SJS112160P

MASTER COPY

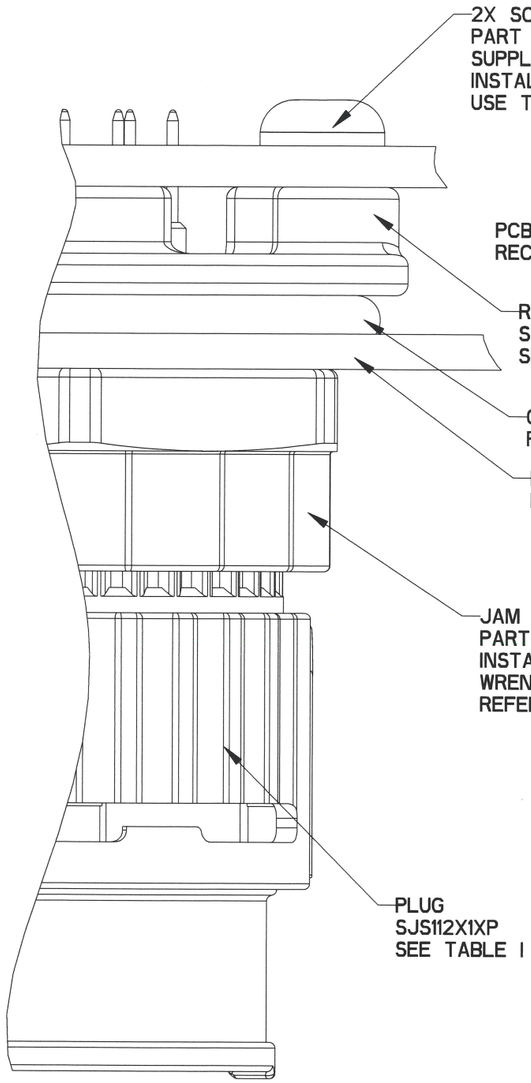

MOUNTING INSTRUCTIONS
SCALE 4:1

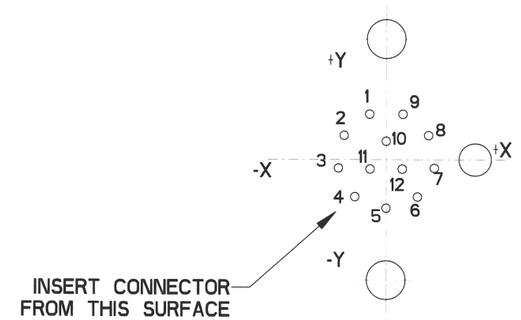

PIN LOCATION
ON PCB

CONTACT HOLE LOCATIONS		
CONTACT NUMBER	LOCATION	
	X AXIS	Y AXIS
1	-.056	+.155
2	-.143	+.083
3	-.162	-.029
4	-.106	-.126
5	.000	-.165
6	+.106	-.126
7	+.162	-.029
8	+.143	+.083
9	+.056	+.155
10	.000	+.063
11	-.055	-.032
12	+.055	-.032

PCB ARRANGEMENT
RECOMMENDED DIMENSIONAL TOLERANCE
.XXX ±.002

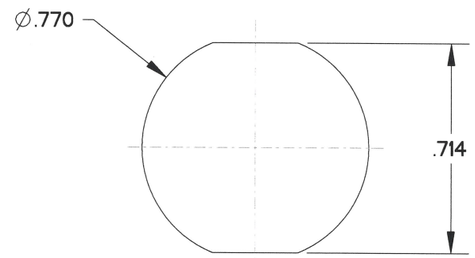

MOUNTING PANEL CUT OUT

SIZE	CUSTOMER DWG NO.	REV
B	SJS112160P	D
CODE: 58982	SCALE: 2:1	SHEET 2 OF 2

SJS112160P

SJS112160P