SJS112120P

TABLE I - PART NUMBER SCHEME					
APCD P/N LESS CONTACTS	APCD P/N WITH CRIMP CONTACTS	PART MARKING	MATING INLINE PLUG	KEY	INNER HOUSING COLOR
SJS112120P	SJS112121P	SJS112120P	SJS112110P	A	BLACK
SJS112220P	SJS112221P	SJS112220P	SJS112210P	B	GREEN
SJS112320P	SJS112321P	SJS112320P	SJS112320P	C	WHITE
SJS112420P	SJS112421P	SJS112420P	SJS112420P	D	YELLOW

REV	ECN	APP'D
-	7463	JT 4/15/15
A	7522	JT 5/15/15
B	7859	JT 12/2/16
C	8833	MD 1/2/20
D	10353	MD 8 July 2026

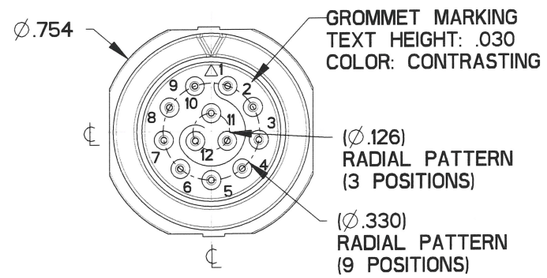

MASTER COPY

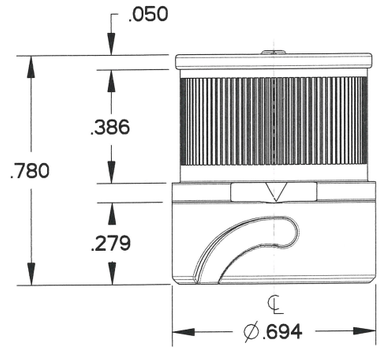

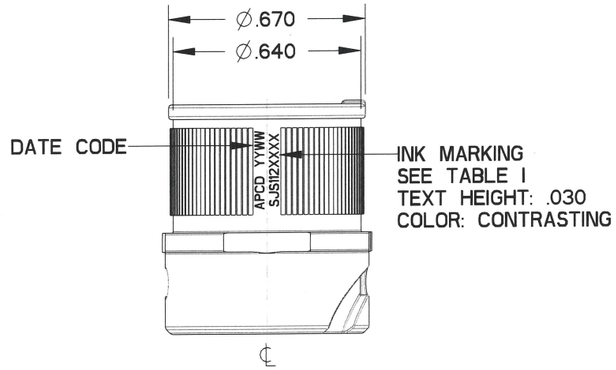

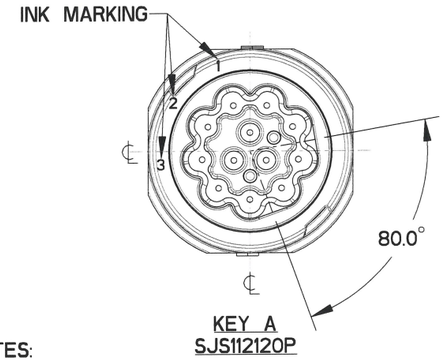

KEY A
SJS112120P

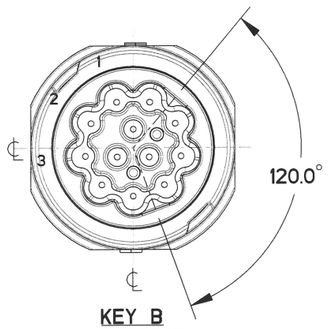

KEY B
SJS112220P

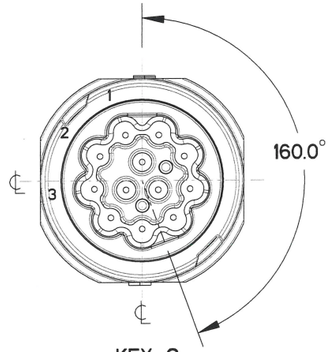

KEY C
SJS112320P

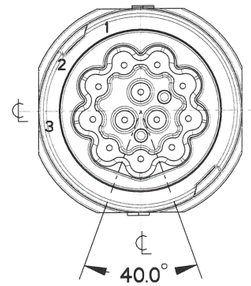

KEY D
SJS112420P

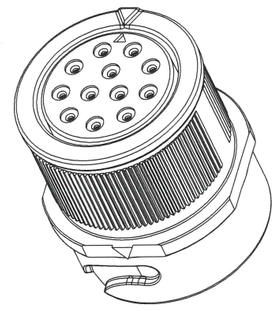

FACE SEAL NOT SHOWN FOR CLARIFICATION

NOTES:
1. MATERIALS -
   OUTER HOUSING: POLYETHERIMIDE
   INNER HOUSING: POLYETHERIMIDE, COLOR: SEE TABLE I
   CONTACT RETAINER: STAINLESS STEEL
   GROMMET: SILICONE RUBBER PER A-A-59588, COLOR: RED
   FACE SEAL: SILICONE RUBBER PER A-A-59588, COLOR: RED
2. FINISH -
   OUTER HOUSING: NICKEL, 200 MICROINCHES MINIMUM
   OVER COPPER, 120 MICROINCHES MINIMUM
3. PART ACCEPTS M39029/58-360 CRIMP PIN CONTACTS
4. MATING CONNECTORS: SEE TABLE I
5. SUPPLIED WITH DUST CAP
6. EST. WEIGHT: 5.1g (LESS CONTACTS)
7. KEY C CONNECTORS WITH WHITE OR AMBER INNER HOUSINGS ARE CROSS-COMPATIBLE

DIMENSIONS	TOLERANCES	PROJECTION
ANSI Y14.5M UNITS: INCHES Pro/E FILE	.XX ±0.01 .XXX ±0.005 ANGLES ±2.0°	

ORIGINAL

THIS DOCUMENT CONTAINS PROPRIETARY INFORMATION WHICH IS THE CONFIDENTIAL PROPERTY OF AMPHENOL PCD INC., BEVERLY, MA

Amphenol Pcd
CUSTOMER DRAWING

ENGR: Roman Ton 06/24/2026
CHKD: 7/8/26
APPD: 8 JULY 2026

TITLE
INLINE RECEPTACLE
SHELL SIZE 11 SJS PEGASUS
12 POSITION SIZE 22

SIZE	CUSTOMER DWG NO.	REV
B	SJS112120P	D

CODE: 58982 | SCALE: 2:1 | SHEET 1 OF 1

SJS112120P
SJS112120P