SJS112110P

TABLE I - PART NUMBER SCHEME						
APCD P/N LESS CONTACTS	APCD P/N WITH CONTACTS	PART MARKING	MATING INLINE RECEPTACLE	MATING PCB JAMNUT RECEPTACLE	KEY	INNER HOUSING COLOR
SJS112110P	SJS112111P	SJS112110P	SJS112120P	SJS112160P	A	BLACK
SJS112210P	SJS112211P	SJS112210P	SJS112220P	SJS112260P	B	GREEN
SJS112310P	SJS112311P	SJS112310P	SJS112320P	SJS112360P	C	WHITE
SJS112410P	SJS112411P	SJS112410P	SJS112420P	SJS112460P	D	YELLOW

REV	ECN	APP'D
-	7463	JT 4/15/15
A	7522	JT 5/15/15
B	7859	JT 12/2/16
C	10353	MD 23 JUN 2026

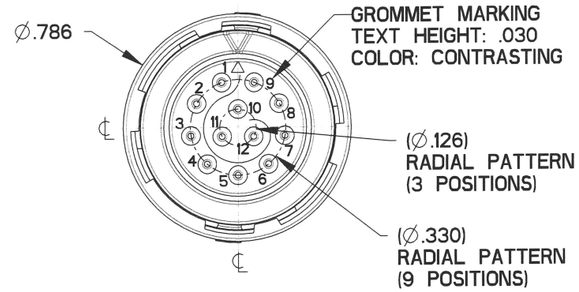

MASTER COPY

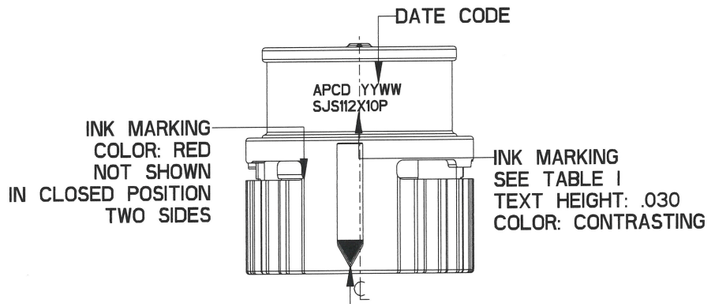

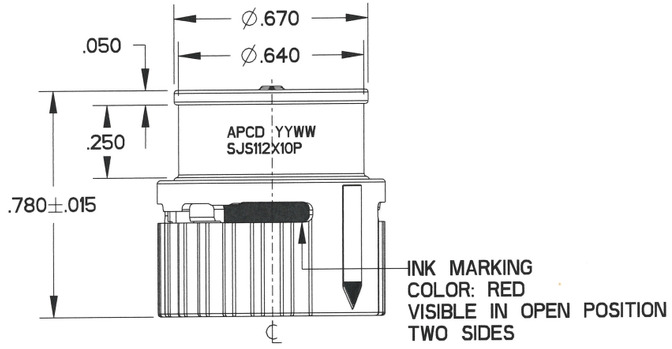

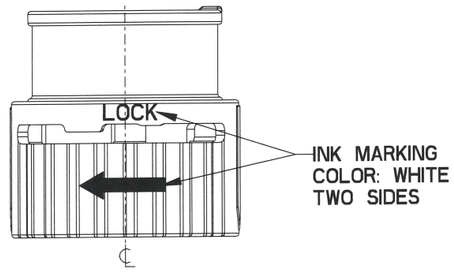

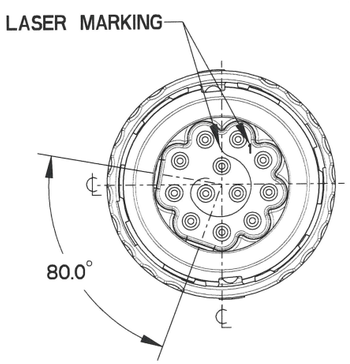

KEY A
SJS112110P

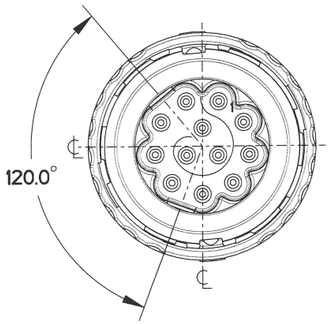

KEY B
SJS112210P

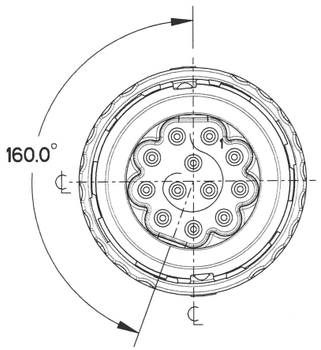

KEY C
SJS112310P

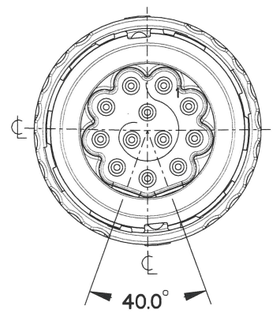

KEY D
SJS112410P

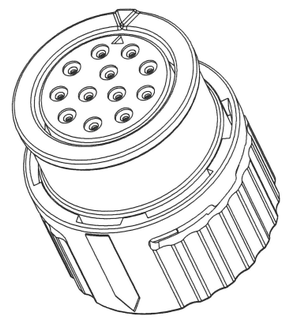

EMI GASKET NOT SHOWN FOR CLARIFICATION

NOTES:
1. MATERIALS -
   OUTER HOUSING: POLYETHERIMIDE
   INNER HOUSING: POLYETHERIMIDE, COLOR: SEE TABLE I
   COUPLING NUT: PA6/6, COLOR: BLACK
   CONTACT RETAINER: STAINLESS STEEL
   EMI GASKET: NICKEL-CARBON FILLED CONDUCTIVE ELASTOMER
   GROMMET: SILICONE RUBBER PER A-A-59588, COLOR: RED
2. FINISH -
   OUTER HOUSING: NICKEL, 200 MICROINCHES MINIMUM
   OVER COPPER, 120 MICROINCHES MINIMUM
3. PART ACCEPTS M39029/57-354 CRIMP SOCKET CONTACTS
4. MATING CONNECTORS: SEE TABLE I
5. EST. WEIGHT: 5.0g (LESS CONTACTS)
6. SUPPLIED WITH DUST CAP.
7. KEY C CONNECTORS WITH WHITE OR AMBER INNER HOUSINGS ARE CROSS-COMPATIBLE

DIMENSIONS	TOLERANCES	PROJECTION	Amphenol Pcd	TITLE
ANSI Y14.5M UNITS: INCHES Pro/E FILE	.XX ±0.01 .XXX ±0.005 ANGLES ±2.0°		CUSTOMER DRAWING ENGR ROMAN TON 05/04/2026	INLINE PLUG SHELL SIZE 11 SJS PEGASUS 12 POSITION SIZE 22
ORIGINAL	THIS DOCUMENT CONTAINS PROPRIETARY INFORMATION WHICH IS THE CONFIDENTIAL PROPERTY OF AMPHENOL PCD INC., BEVERLY, MA		CHKD 6/3/26 APPD 23 JUN 2026	SIZE B · CUSTOMER DWG NO. SJS112110P · REV C CODE: 58982 · SCALE: 2:1 · SHEET 1 OF 1

SJS112110P

SJS112110P