SJS0AA730P_C

TABLE I - PART NUMBER SCHEME		
APCD P/N	CONTACTS SUPPLIED	PART MARKING
SJS0AA730P	NONE	SJS0AA730P
SJS0AA731P	(5) M39029/58-360 (4) M39029/58-364	
SJS0AA732P	(5) SIZE 22 PC TAIL CNP831033 (4) SIZE 16 PC TAIL CNP8310160	
SJS0AA737P	(5) SIZE 22 PC TAIL CNP831033 (3) SIZE 16 PC TAIL CNP8310160 (1) SIZE 16 PC TAIL COAX 173-900163-01	

REV	ECN	APP'D
-	7639	JT 10/27/15
A	7893	JT 12/19/16
B	7959	MD 3/13/17
C	10195	VN 2025.06.06 09:30:23 -04'00'

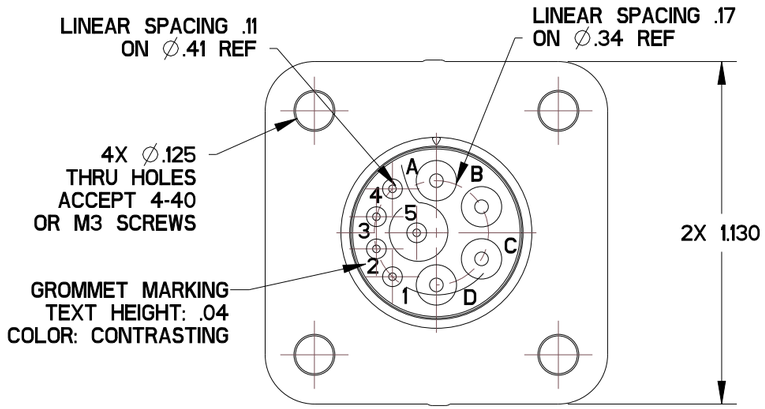

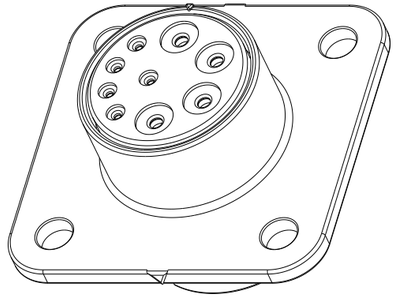

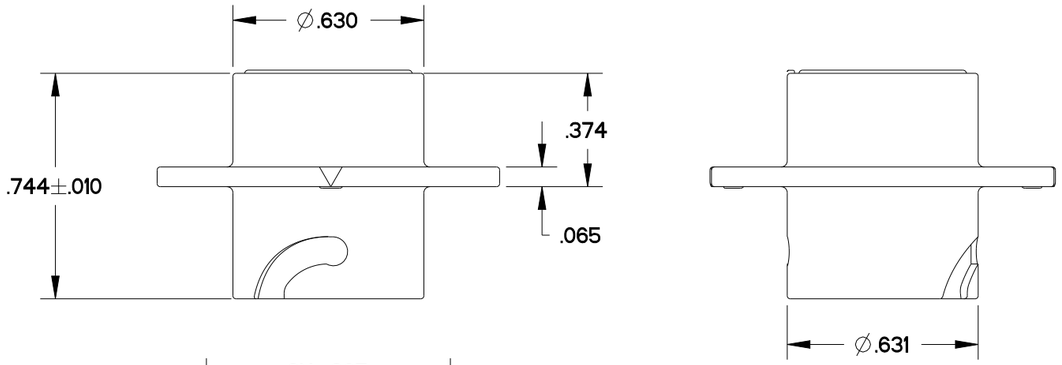

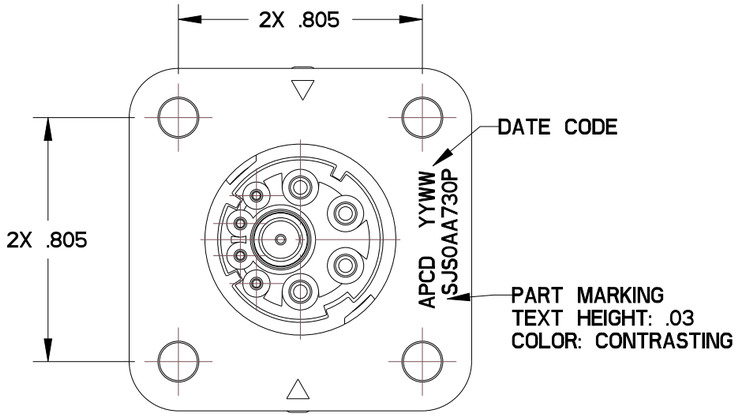

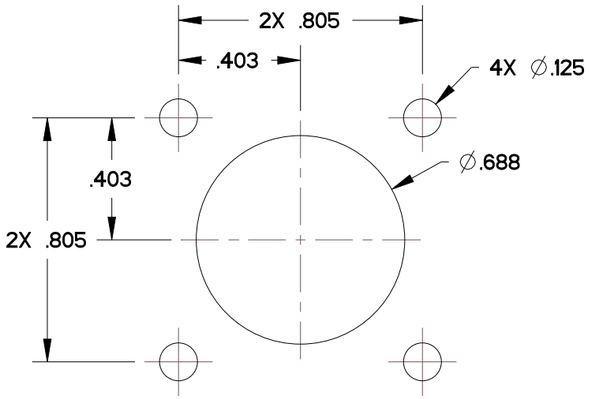

RECOMMENDED PANEL CUTOUT

NOTES:

1. MATERIALS:
   HOUSING: POLYETHERIMIDE
   CONTACT RETAINER: STAINLESS STEEL
   GROMMET & FACE SEAL: SILICONE RUBBER PER A-A-59588
2. FINISH:
   HOUSING: NICKEL, 200 MICROINCHES MINIMUM OVER COPPER, 120 MICROINCHES MINIMUM
4. PART MATES WITH SJS860910P/911P/917P
5. EST WEIGHT: 5.2g
6. TEST REQUIREMENTS PER QWI-00-183 (C)
7. SUPPLIED WITH DUST CAP

DIMENSIONS	TOLERANCES	PROJECTION
ANSI Y14.5M UNITS: INCHES Pro/E FILE	.XX ±0.01 .XXX ±0.005 ANGLES ±1.0°	

ORIGINAL

THIS DOCUMENT CONTAINS PROPRIETARY INFORMATION WHICH IS THE CONFIDENTIAL PROPERTY OF AMPHENOL PCD INC., BEVERLY, MA

Amphenol Pcd
CUSTOMER DRAWING

ENGR CARINA BUCCI MAY-23-25

CHKD Marcus DiGiacomo — Digitally signed by Marcus DiGiacomo Date: 2025.06.06 09:14:11 -04'00'

APPD — Date: 2025.06.06 09:30:01 -04'00'

TITLE
PANEL MOUNT RECEPTACLE
SHELL SIZE 10 SJS PEGASUS
4 POS SIZE 16, 5 POS SIZE 22/22D

SIZE	DWG NO.	REV
B	SJS0AA730P_C	C

CODE: 58982 | SCALE: 2:1 | SHEET 1 OF 2

SJS0AA730P_C
SJS0AA730P_C

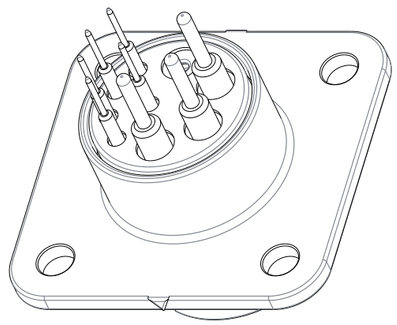

SJS0AA732P

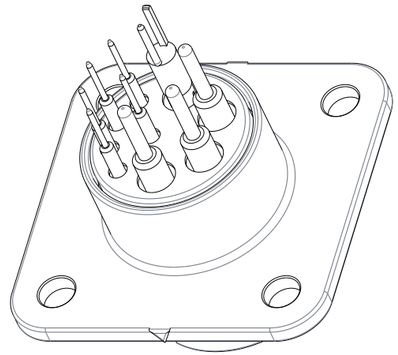

SJS0AA737P

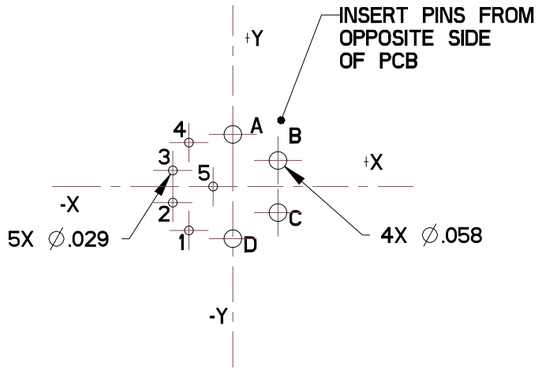

PIN LOCATION ON PCB FOR SJS0AA732P
INSTALL SIZE 22 PC TAIL CNP831033 IN LOC 1,2,3,4,5
INSTALL SIZE 16 PC TAIL CNP8310160 IN A,B,C,D

TABLE II - CONTACT HOLE LOCATIONS		
CONTACT NUMBER	LOCATION	
	X AXIS	Y AXIS
A	.000	+.172
B	+.149	+.086
C	+.149	-.086
D	.000	-.172
1	-.145	-.145
2	-.198	-.053
3	-.198	+.053
4	-.145	+.145
5	-.065	.000

PCB ARRANGEMENT FOR SJS0AA732P
RECOMMENDED DIMENSIONAL TOLERANCE
.XXX ±.002

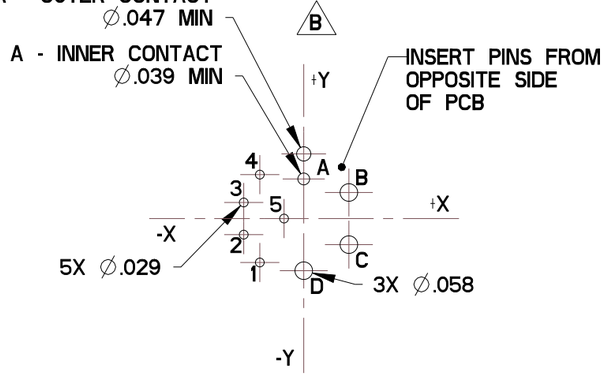

PIN LOCATION ON PCB FOR SJS0AA737P
INSTALL SIZE 22 PC TAIL CNP831033 IN LOC 1,2,3,4,5
INSTALL SIZE 16 PC TAIL CNP8310160 IN B,C,D
INSTALL SIZE 16 PC TAIL COAX 173-900163-01 IN A

TABLE II - CONTACT HOLE LOCATIONS		
CONTACT NUMBER	LOCATION	
	X AXIS	Y AXIS
A - OUTER CONTACT	.000	+.213
A - INNER CONTACT	.000	+.131
B	+.149	+.086
C	+.149	-.086
D	.000	-.172
1	-.145	-.145
2	-.198	-.053
3	-.198	+.053
4	-.145	+.145
5	-.065	.000

PCB ARRANGEMENT FOR SJS0AA737P
RECOMMENDED DIMENSIONAL TOLERANCE
.XXX ±.002

SIZE	DWG NO.	REV
B	SJS0AA730P_C	C
CODE: 58982	SCALE: 2:1	SHEET 2 OF 2

SJS0AA730P_C
SJS0AA730P_C