SJS0511120P

POSITIONAL MARKING
COLOR: BLACK

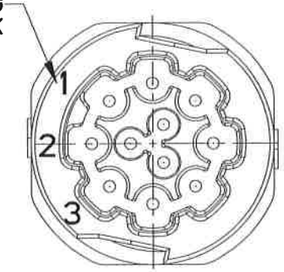

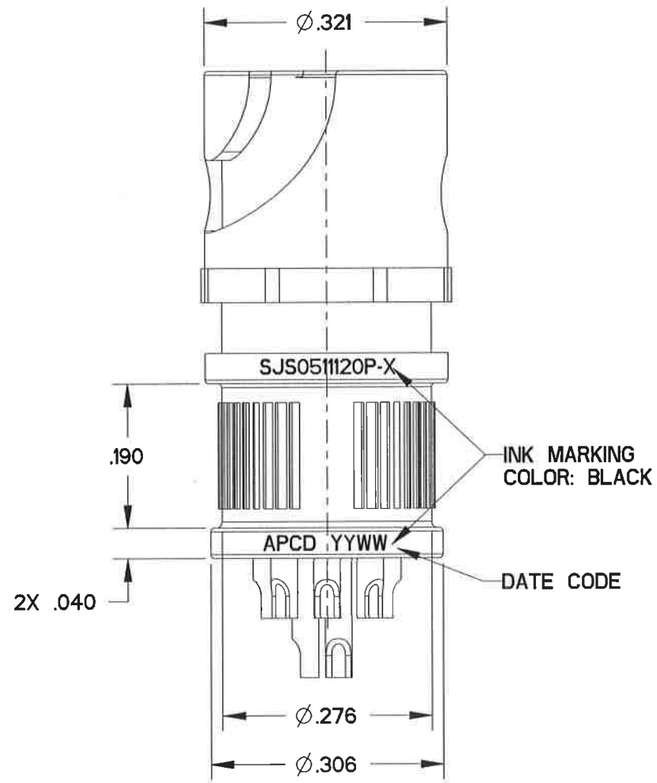

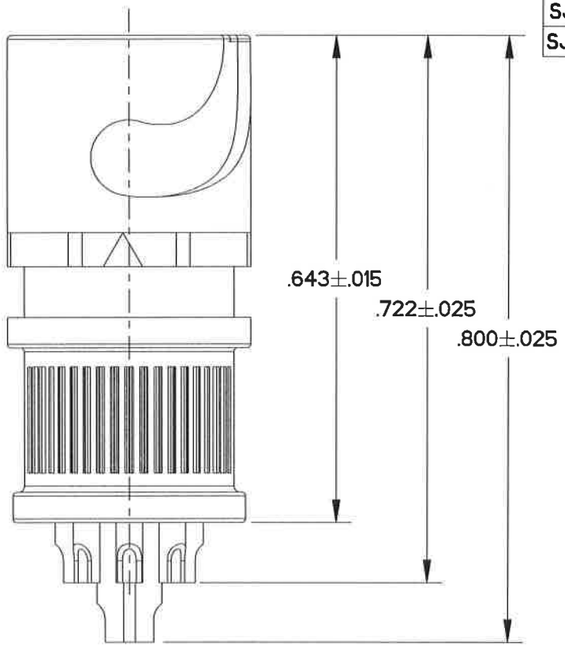

TABLE I: PART FAMILY		
PART No.	No. CONTACTS INSTALLED	MATING INLINE PLUG
SJS0511120P	1 THROUGH 11	SJS0511110P
SJS0511120P-1	1 ONLY	SJS0511110P-1
SJS0511120P-2	1 THROUGH 2	SJS0511110P-2
SJS0511120P-3	1 THROUGH 3	SJS0511110P-3
SJS0511120P-4	1 THROUGH 4	SJS0511110P-4
SJS0511120P-5	1 THROUGH 5	SJS0511110P-5
SJS0511120P-6	1 THROUGH 6	SJS0511110P-6
SJS0511120P-7	1 THROUGH 7	SJS0511110P-7
SJS0511120P-8	1 THROUGH 8	SJS0511110P-8
SJS0511120P-9	1 THROUGH 9	SJS0511110P-9
SJS0511120P-10	1 THROUGH 10	SJS0511110P-10

REV	ECN	APP'D
-	7842	10/7/10

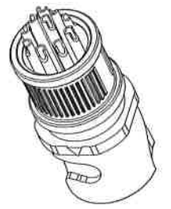

SCALE 2:1

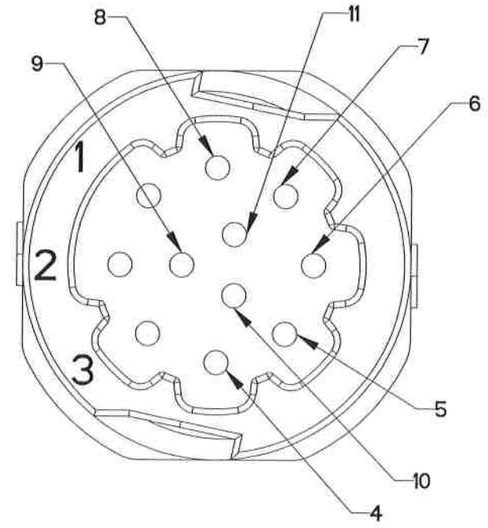

MATING FACE VIEW
EMI SPRING NOT SHOWN FOR CLARITY
SCALE 8:1

NOTES:
1. MATERIALS:
   HOUSING: POLYETHERIMIDE
   CONTACTS: COPPER ALLOY
   FACE SEAL: SILICONE RUBBER PER A-A-59588, COLOR: RED
   POTTING COMPOUND: DIELECTRIC SEALANT
2. FINISH:
   HOUSING: NICKEL, 200 MICROINCHES MINIMUM
   OVER COPPER, 120 MICROINCHES MINIMUM
   CONTACTS: GOLD 30 MICROINCHES MINIMUM
   OVER NICKEL 80 MICROINCHES MINIMUM
3. SOLDER CUPS ACCEPT 28, 30, & 32 AWG
4. EST. WEIGHT: 3.0 GRAMS
5. SUPPLIED WITH DUST CAP.

DIMENSIONS	TOLERANCES	PROJECTION
ANSI Y14.5M	.XX ±0.01	
UNITS: INCHES	.XXX ±0.005	
Pro/E FILE	ANGLES ±2.0°	

ORIGINAL

THIS DOCUMENT CONTAINS PROPRIETARY INFORMATION WHICH IS THE CONFIDENTIAL PROPERTY OF AMPHENOL PCD INC. BEVERLY, MA, USA

Amphenol Pcd
SPECIFICATION DRAWING

ENGR ANDREW.WANG Dec-02-15
CHKD 10/6/16
APPD 10/7/10

TITLE
INLINE RECEPTACLE
SHELL SIZE 5 SJS NANO-PEGASUS
11 POS SIZE 28

SIZE	DWG NO.	REV
B	SJS0511120P	-
CODE: 58982	SCALE: 5:1	SHEET 1 OF 1

SJS0511120P